VIRTUAL APPLICATION GUIDE: RUGGED FIBER OPTICS FOR SATELLITES

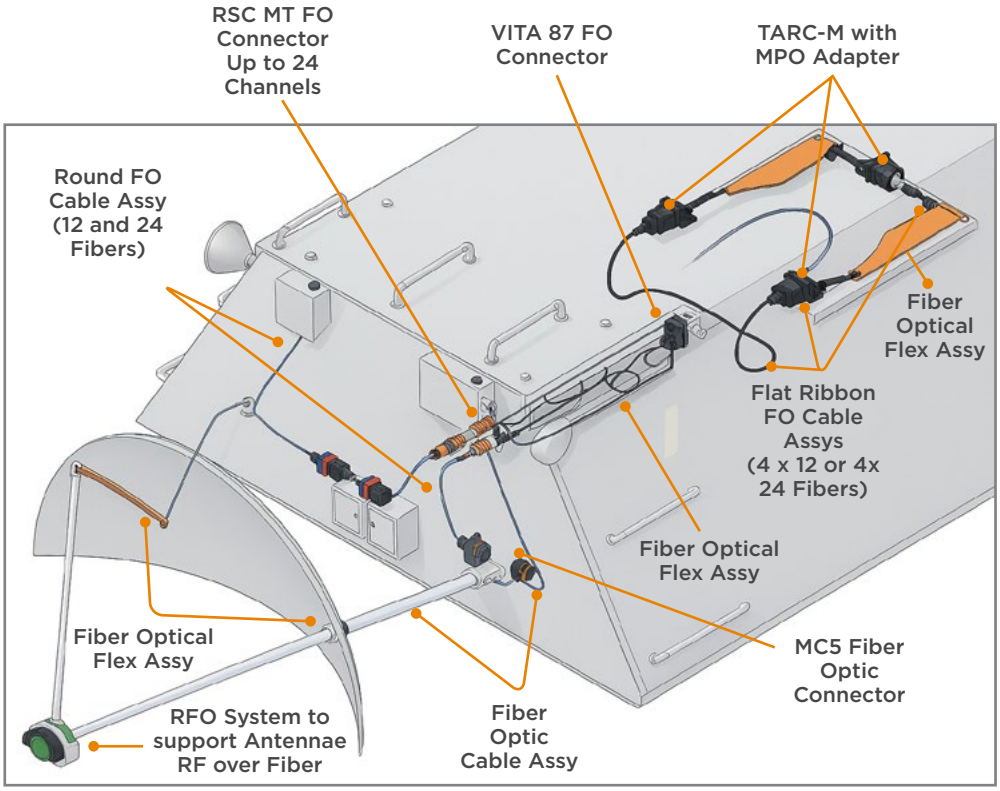

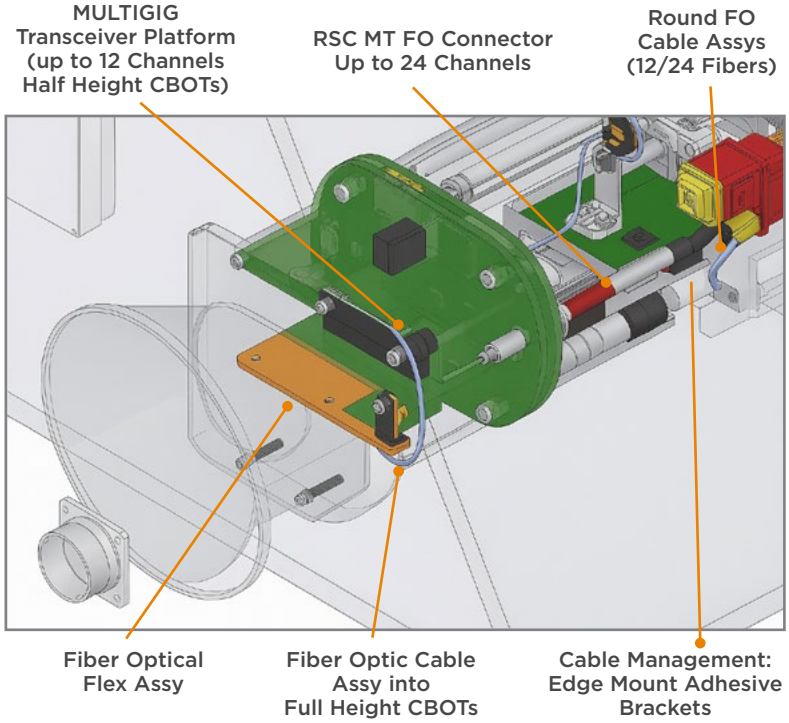

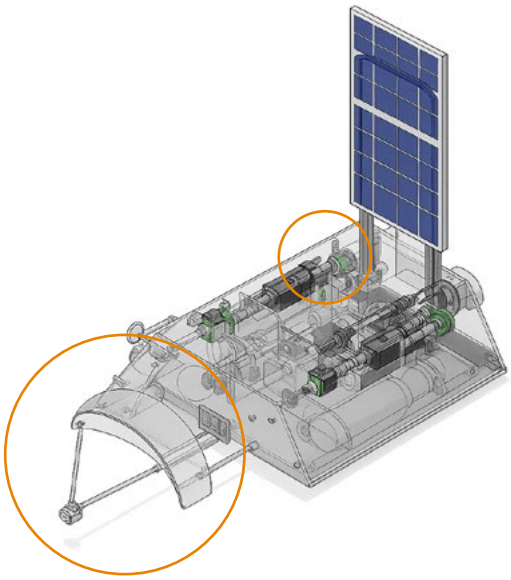

© 2026 TE Connectivity. All Rights Reserved.