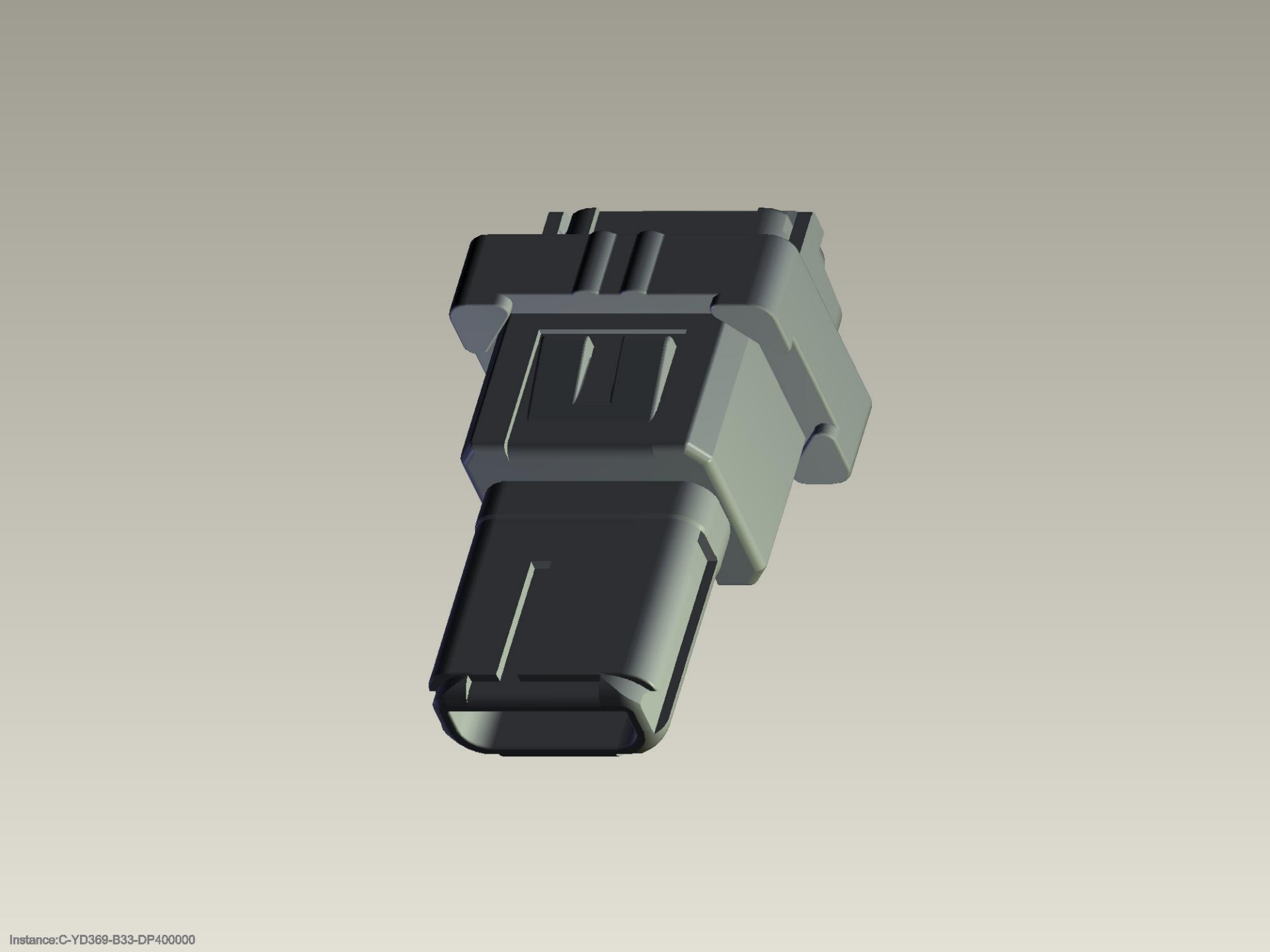

Instance:C-YD369-B33-DP400000