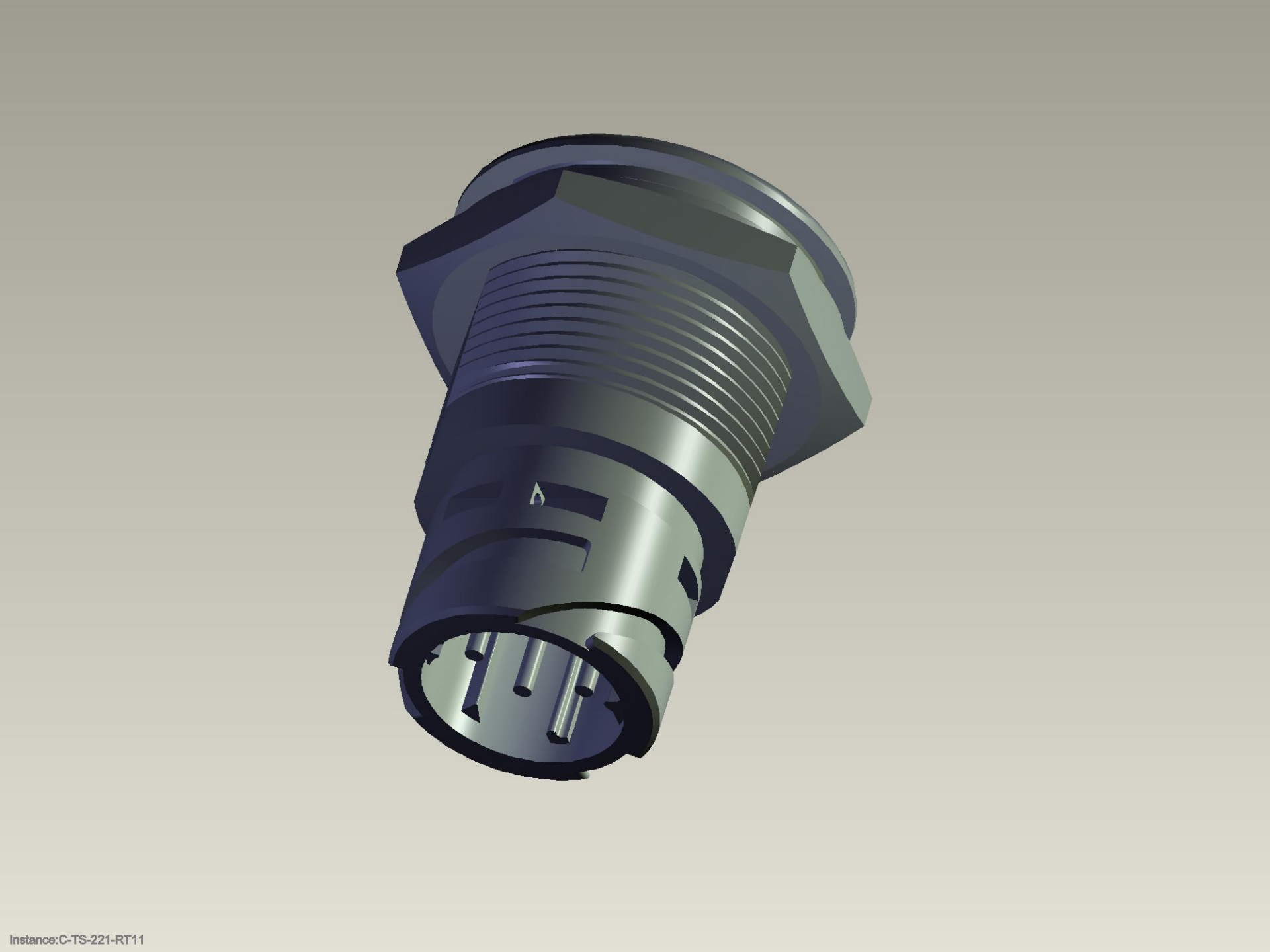

Instance:C-TS-221-RT11