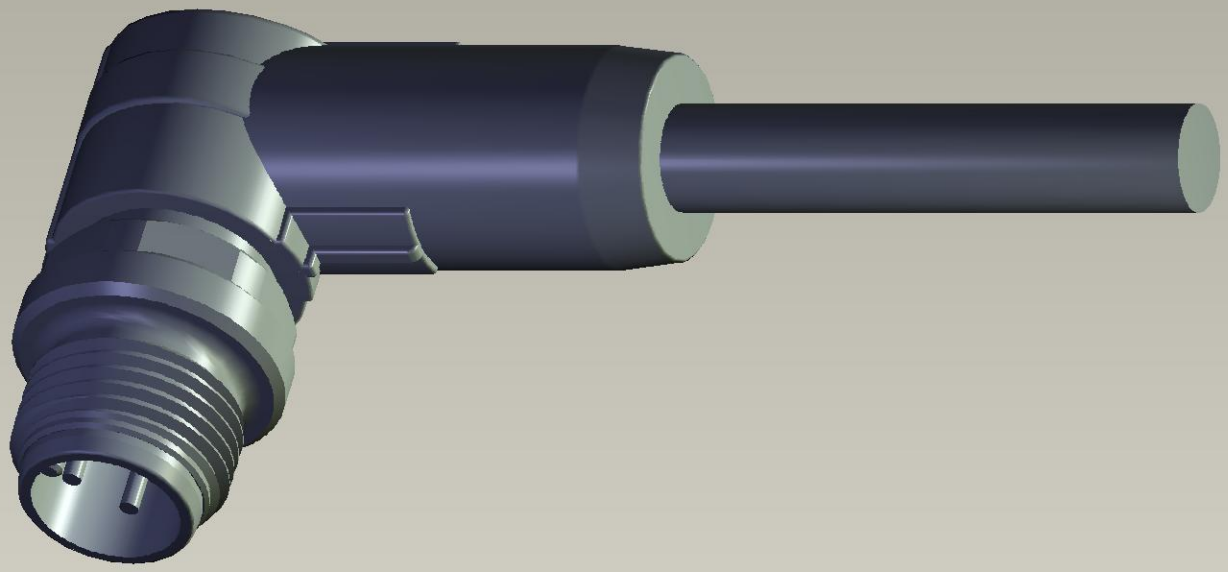

Instance:C-TAA542B1411-060