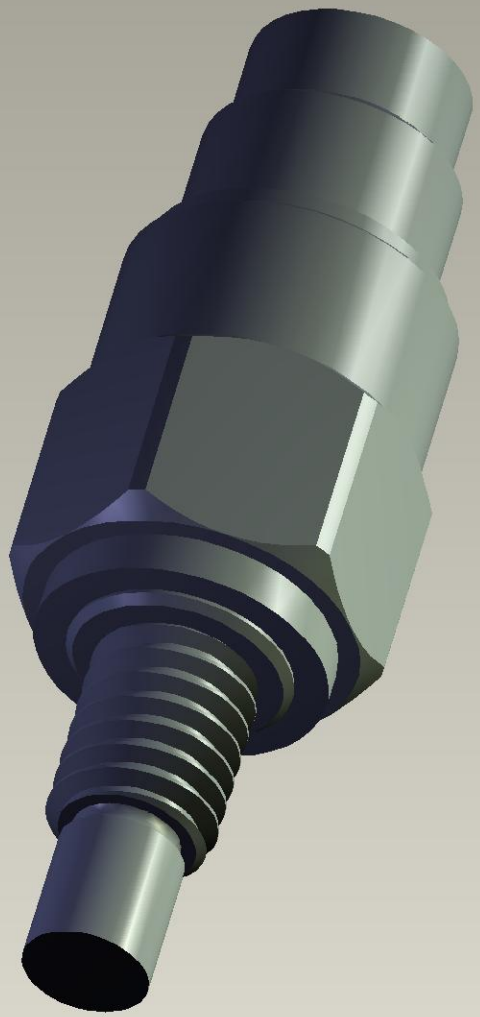

Instance:C-EXPM4-20BG-C20006