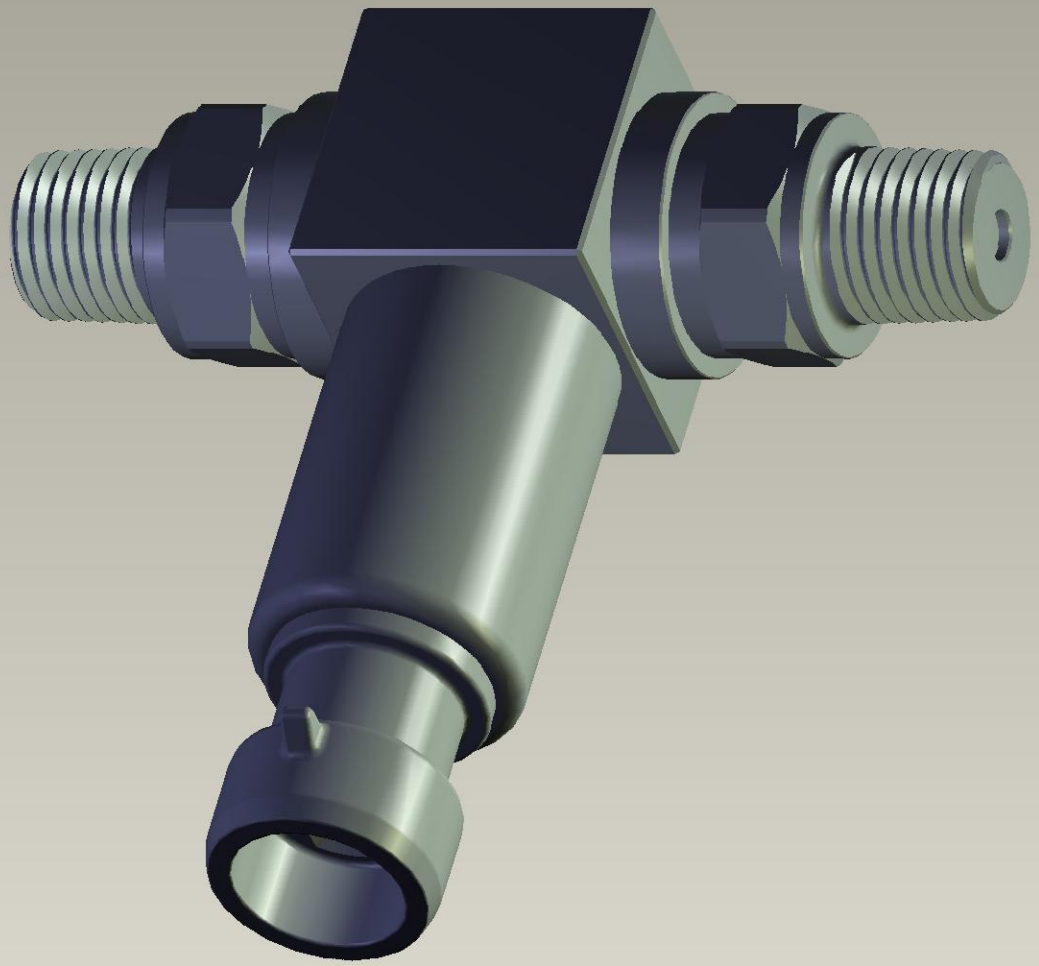

Instance:C-D5154-000005-005PD