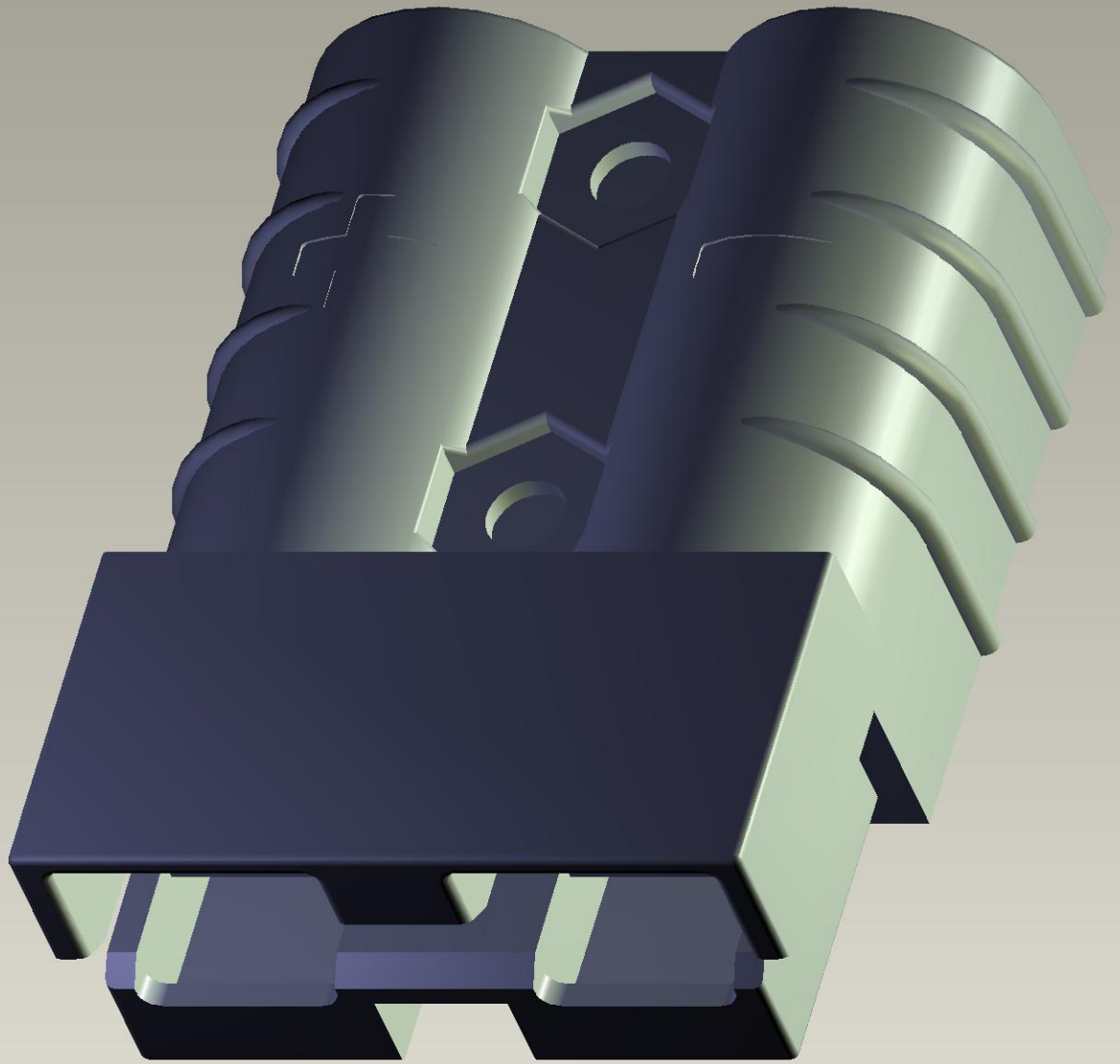

Instance:C-647845-3