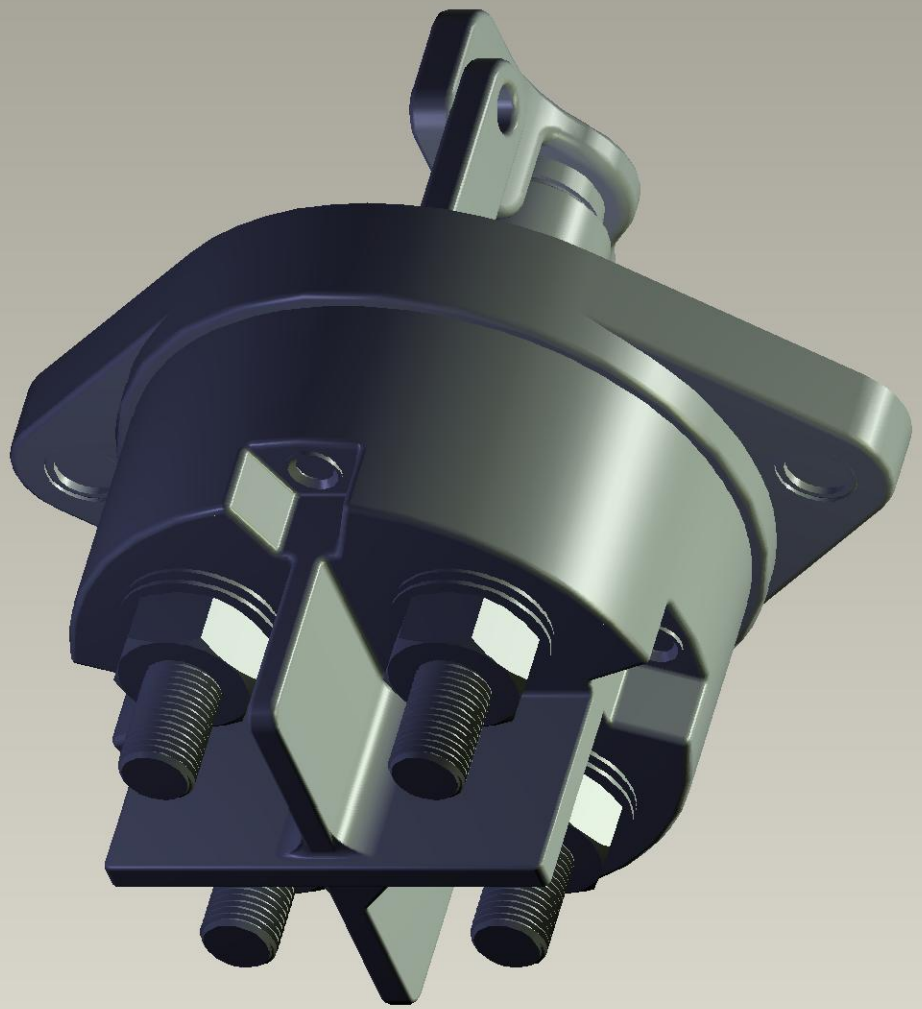

Instance:C-35-554-901