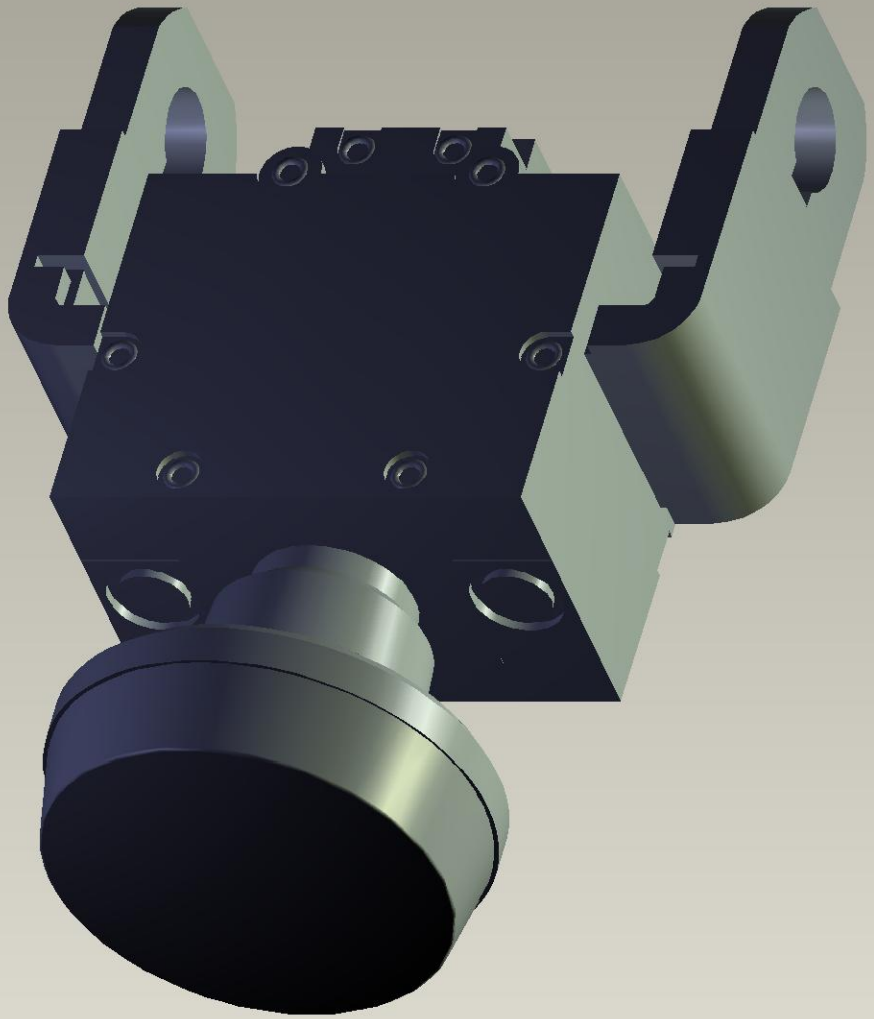

Instance:C-24-05-02