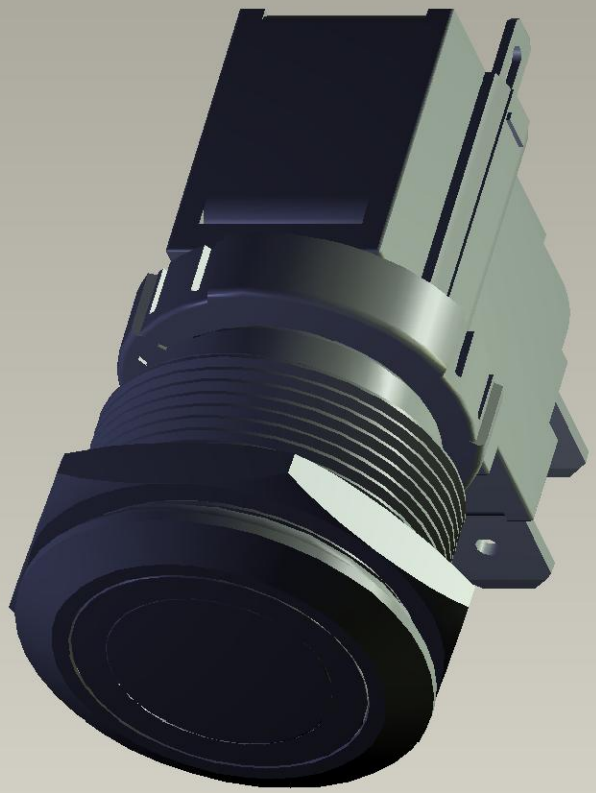

Instance:C-2364689-8