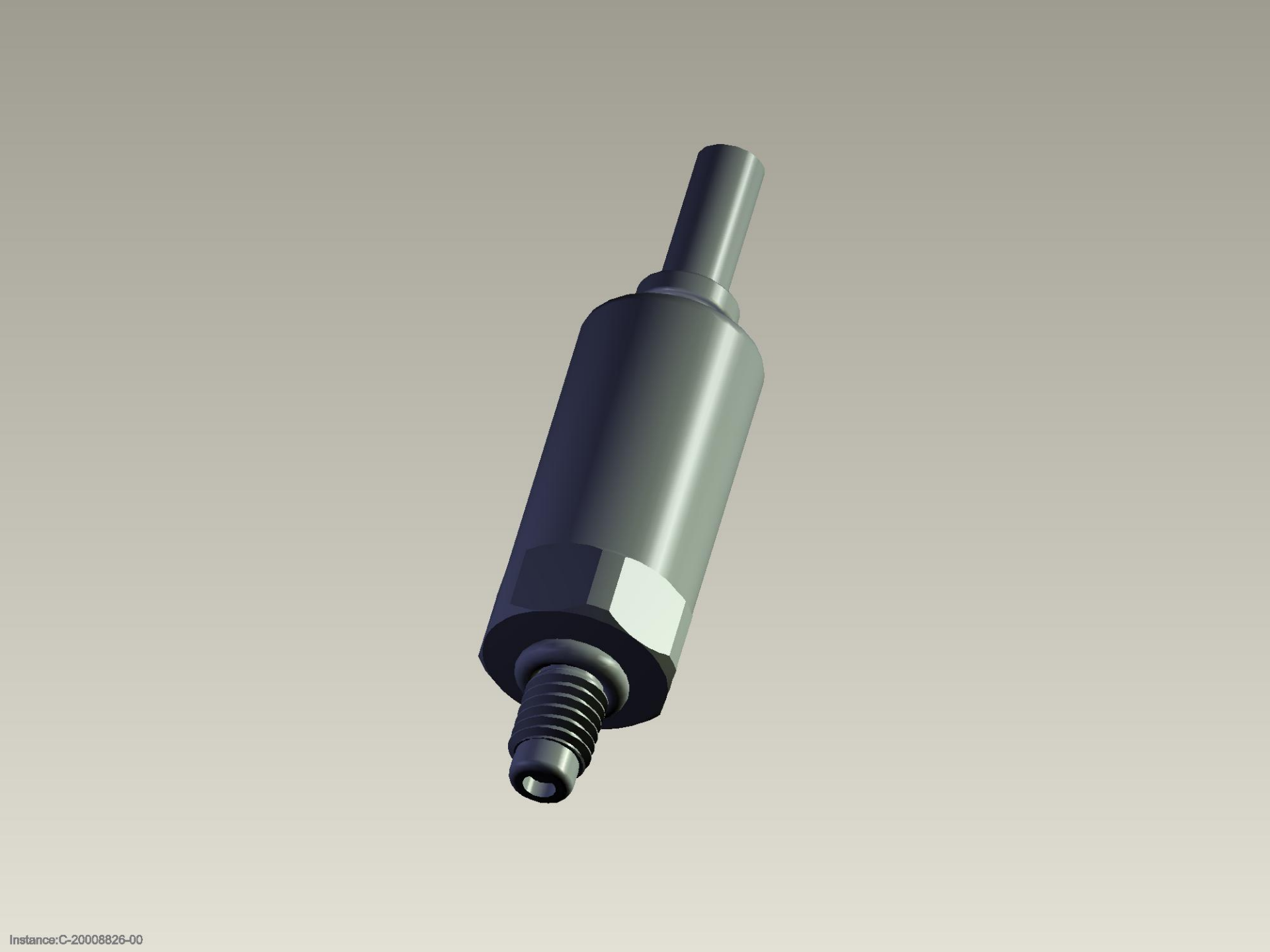
Instance:C-20008826-00