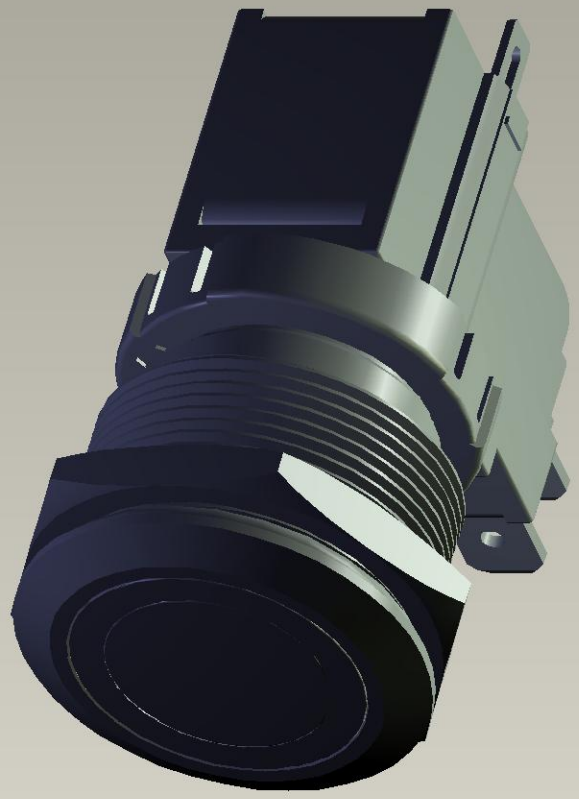

Instance:C-1-2364688-6