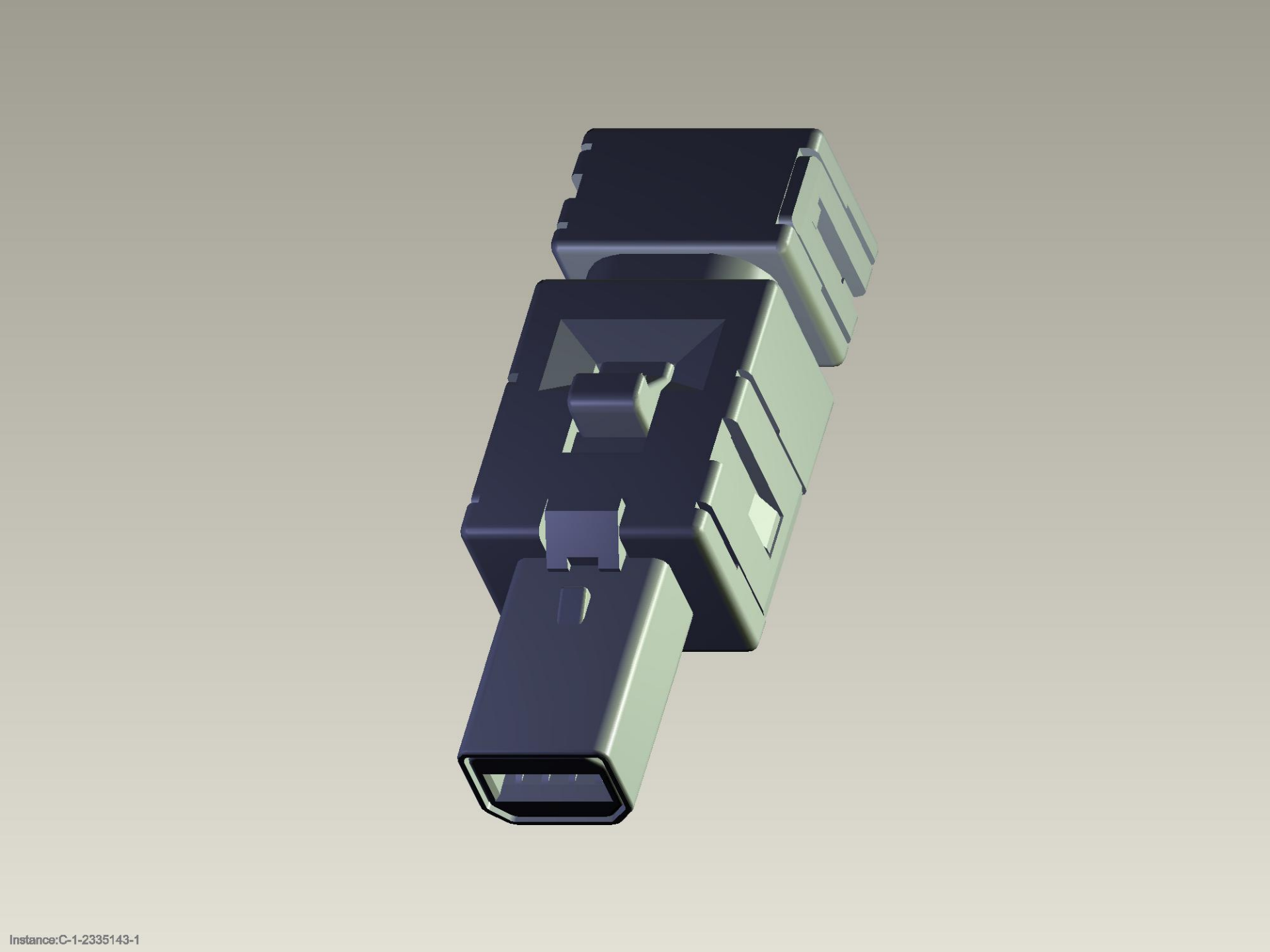

Instance:C-1-2335143-1