THIS DRAWING IS UNPUBLISHED. RELEASED FOR PUBLICATION 2015
© COPYRIGHT 2015 BY TE CONNECTIVITY ALL RIGHTS RESERVED.

REVISIONS					
P	LTR	DESCRIPTION	DATE	DWN	APVD
	A	NEW DRAWING	08SEP2015	CS	CE
	B	COVER PART MODIFICATION	22JUN2016	PV	CF
	C	REVISED PER PCN: E-17-004350	28MAR2017	NS	GCR
	C1	PRODUCT SPECIFICATION AND BACKSHELL THREAD SIZE DETAILS ADDED	02JAN2019	SS	GCR

OPEN CONDITION:
Geöffnet:

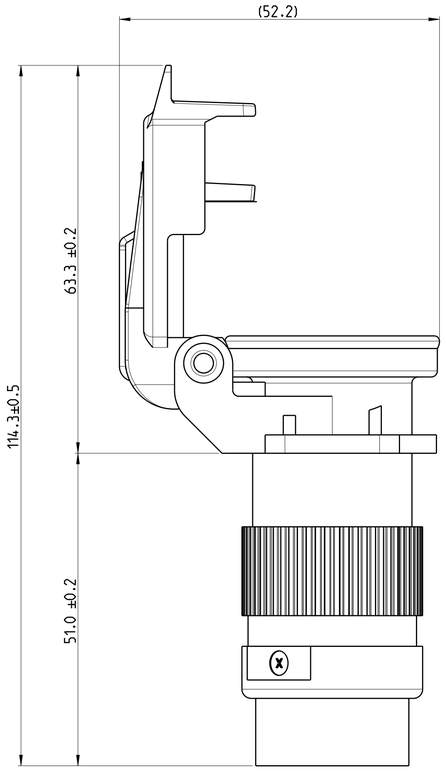

DELIVERY CONDITION:
Lieferzustand:

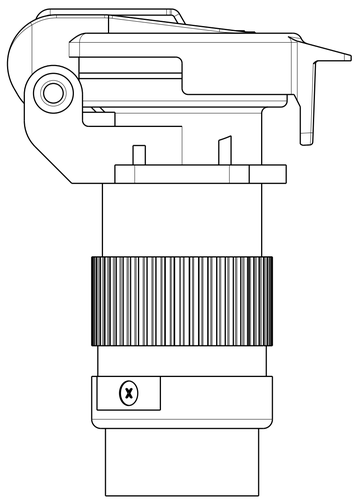

SECTION A-A
Schnitt

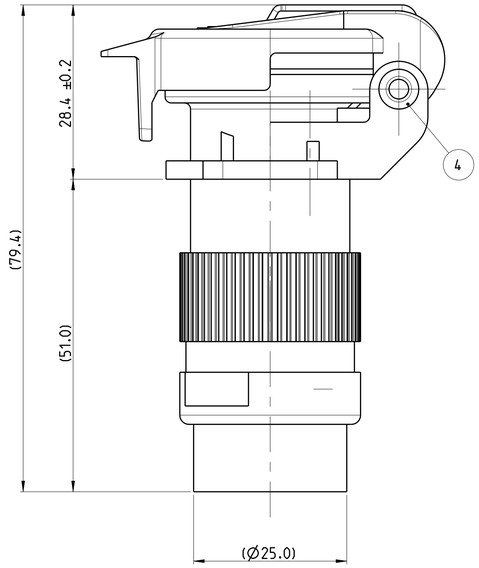

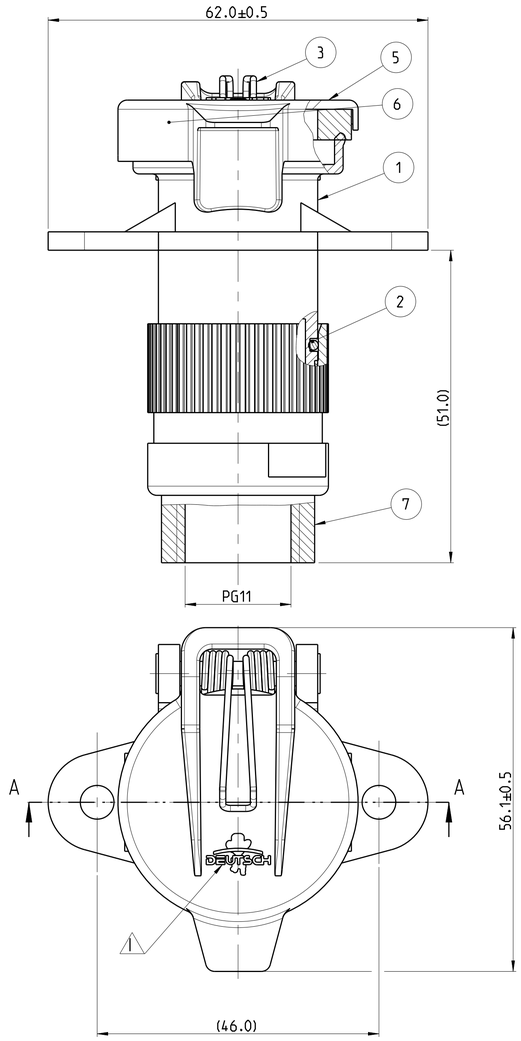

NOTES
Bemerkungen

1. DEUTSCH LOGO.
   Deutsch Logo
2. BULK PACKAGING IN CORRUGATED BOX
   Schuettgut im Versandkarton
3. ALL SYMMETRIC DIMENSIONS ⌯ 0.1
   Alle Symmetriemaße
4. SUITABLE COUNTERPART SEE DRAWING: CAR3PC68WP
   Passender Gegenstecker siehe Zeichnung:CAR3PC68WP
5. MALFUNCTION CAUSED BY LACQUER IS NOT COVERED BY TE CONNECTIVITY WARRANTY
   Funktionsbeeintraechtigung durch Lackieren liegt nicht im Einfluss und Gewaehrleistungsumfang von TE connectivity.

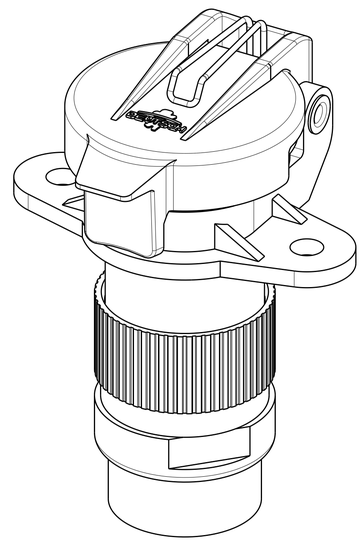

ITEM NO	DESCRIPTION Beschreibung	COLOUR Farbe	MATERIAL	QTY Stueck	QTY Stueck	QTY Stueck	QTY Stueck	QTY Stueck	QTY Stueck	QTY Stueck	QTY Stueck	QTY Stueck
1	3 WAY RECEPTACLE HOUSING 3 WAY Steckergehäuse	BLACK schwarz	PA6 GF-15	1	1	1	1	1	1	1	1	C
2	O-RING O-RING	BLACK schwarz	- -									
3	SPRING Feder	-	SS 304									
4	RIVET Schnappniete	-	COPPER ALLOY									
5	COVER Deckel	BLACK schwarz	PA6 GF-15									
6	COVER SEAL Deckeldichtung	-	- -									
7	BACK SHELL Endtülle	BLACK schwarz	PA6 GF-15									

ITEM NO ASSY	QTY Stueck	QTY Stueck	REV.	DEUTSCH ORDER-NO. DEUTSCH Bestell-Nr.
1	1	1	C	CAR3SC68WS

THIS DRAWING IS A CONTROLLED DOCUMENT.
DIMENSIONING AND TOLERANCING PER GPS (ISO STANDARDS)

DIMENSIONS: mm

TOLERANCES UNLESS OTHERWISE SPECIFIED: ACC. TO ISO 8015
0 PLC ±
1 PLC ±
2 PLC ±
3 PLC ±
4 PLC ±
ANGLES ±0°

MATERIAL: SEE TABLE siehe Tabelle
FINISH: - -

DWN SHIVAKUMAR H 04AUG2015
CHK C. FINZER 06AUG2015
APVD C. EBERWEIN 06AUG2015
PRODUCT SPEC 108-94602
APPLICATION SPEC -
WEIGHT 36.5 g
CUSTOMER DRAWING

TE Connectivity

NAME 3POS. RECEPTACLE
3Pos. Steckdose
-

SIZE	CAGE CODE	DRAWING NO	RESTRICTED TO
A1	-	C-CAR3SC68WS	

SCALE 2:1 SHEET 1 OF 1 REV C1

4805 (3/13)