DRAWING NO NCA0800-0850-C

THIS DRAWING IS A CONTROLLED DOCUMENT

WRAPTER

ARMOUR RODS

CATALOGUE NUMBER: NCA0800-0850
SUITS CONDUCTOR

STRANDING	COND. TYPE	DIAMETER	FITTING LAY
7/2.75	COPPER	8.25	RIGHT HAND

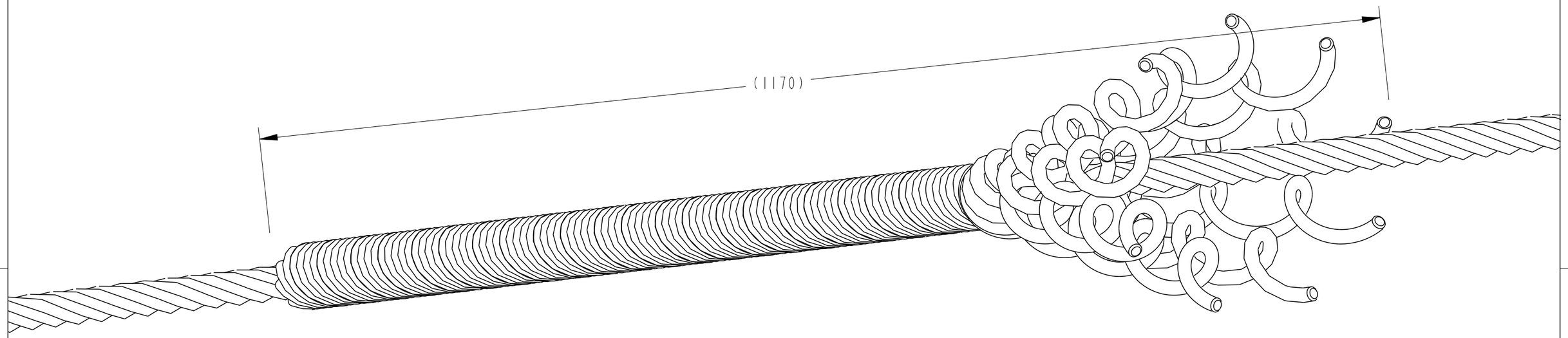

BOX LABEL

WRAPTER TE connectivity

P/N: NCA0800-0850
ID:
DESCRIPTION:
NON-TENSION HARD DRAWN COPPER ARMOUR RODS
7/2.75 COPPER

RANGE: 8.00 - 8.50
COLOUR-CODE: WHITE
QTY: 20 WEIGHT: ----- BATCH: ------

PRODUCT LABEL

WRAPTER TE connectivity

NCA0800-0850
7/2.75 COPPER

WEIGHT: 0.84kg
BATCH NO: ----------
MONTH/YEAR: ----------

TECHNICAL SPECIFICATIONS;

CATALOGUE NUMBER: NCA0800-0850
DESCRIPTION: NON-TENSION HARD DRAWN COPPER ARMOUR RODS
MATERIAL: HARD DRAWN COPPER WIRE
NUMBER OF RODS: 9
ROD DIAMETER: 3.25mm
OVERAL LENGTH: 1170mm
END FINISH: CHAMFERED
FITTING LAY DIRECTION: RIGHT HAND
COLOUR CODED: WHITE
RODS ARE LABELED, BUNDLED IN A SET AND TAPED AT BOTH ENDS.

THIS INFORMATION IS CONFIDENTIAL AND PROPRIETARY TO TE CONNECTIVITY CORPORATION AND ITS WORLDWIDE SUBSIDIARIES AND AFFILIATES. IT MAY NOT BE DISCLOSED TO ANYONE, OTHER THAN TE CONNECTIVITY PERSONNEL, WITHOUT WRITTEN AUTHORIZATION FROM TE CONNECTIVITY CORPORATION, AUSTRALIA.

	POS	REV	REVISION RECORD	DATE	DWN	APVD
LOC						
DIST	—	1	NEW RELEASE	06-05-2013	RN	AT

IMPLIED NOTES
BURRS AND SHARP EDGES REMOVED
SCREW THREADS ARE TO AS 1275
DO NOT WORK TO DIMS MARKED REF
SURFACE FINISH 6.3 U.N.O.
DIMS ARE IN mm. DO NOT SCALE

IMPLIED TOLERANCES
HOLE DIA AND LOCATIONS..±0.5mm.
DIMENSIONS UP TO 30mm...±1.5mm.
DIMENSIONS OVER 30mm...±5%.
UP TO A MAX OF.....±5mm.
ANGULAR DIMENSIONS.....±5°.

TCPN: -
PART Alias UTX/DUL: NCA0800-0850
Cat No: NCA0800-0850
MATERIAL DESC: HARD DRAWN COPPER WIRE
MATERIAL NO: -
MATL SPEC/STD/DRG NO: -
PROCESS SPEC HEAT TREAT/PLATING NO:

TITLE: NON-TENSION HARD DRAWN COPPER ARMOUR RODS (NCA) FITTING
COND.RANGE: Ø8.00-Ø8.50 7/2.75 COPPER

DRAWN: RN | DATE: 06-05-2013
CHECKED: MN | APPROVED: AT

TE Connectivity
2/3 Corella Close
Berkeley Vale NSW 2261 Australia

SIZE: A3 | PROJECTION: 3RD ANGLE | SCALE: NTS | DRAWING NO: NCA0800-0850-C | SHEET 1 OF 1 | REV 1

Format: generic_ma3_au_rl.frm
Template: tec_generic_a3_metric_au_rl.drw
Dwg No from Pt Mod Fam Tbl: >AUXXXXX