PART No.	CATALOGUE No.
EF8416-000	CC60-70-SN-M12-DOUB
CV8204-000	CC68-81-SN-M12-DOUB

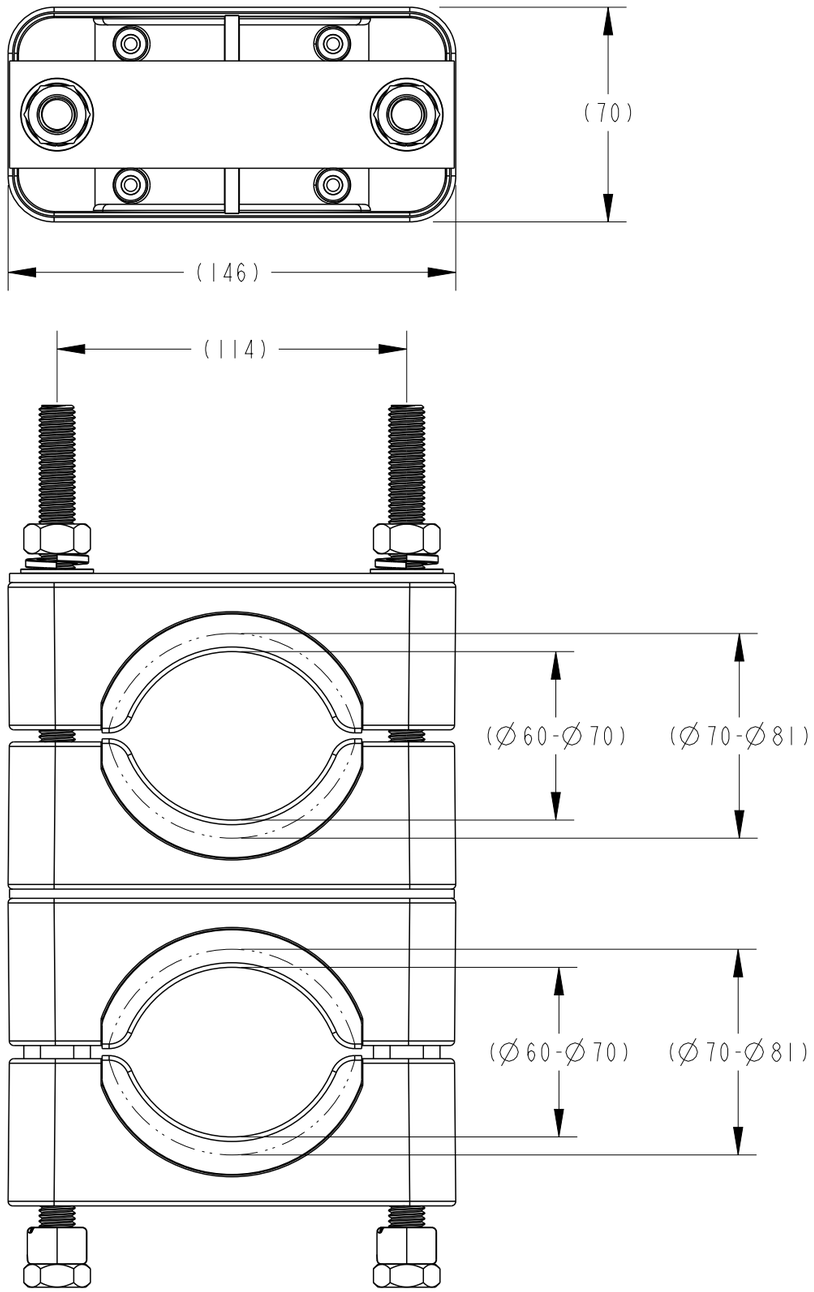

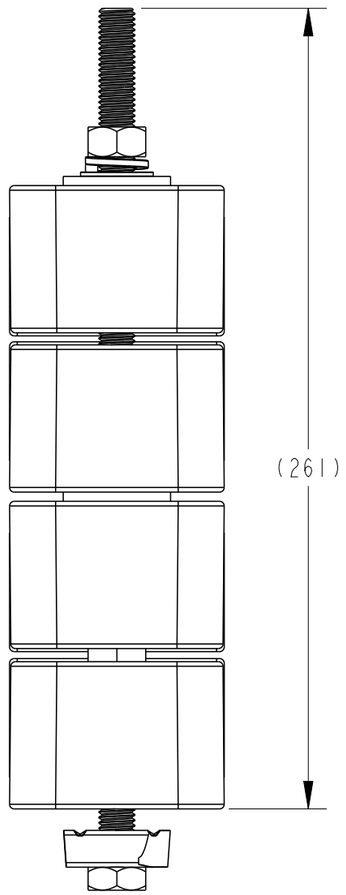

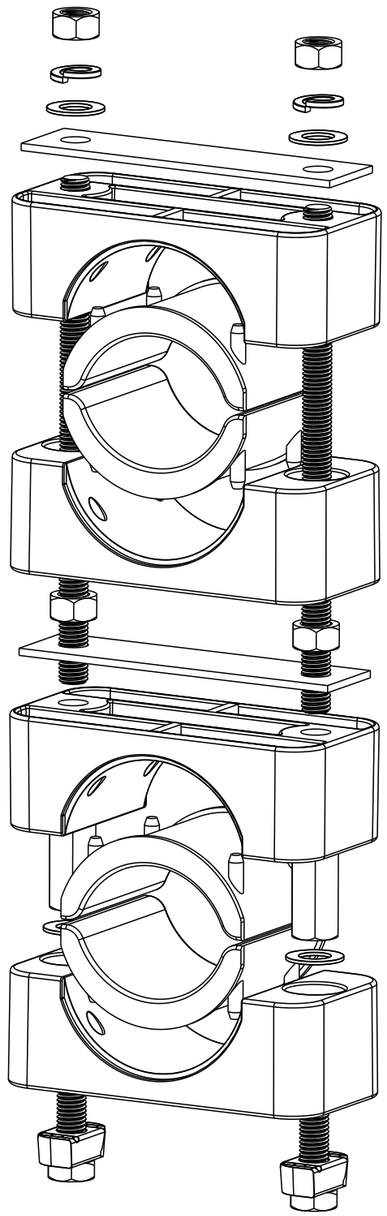

SCALE 2:5

LOC					
DIST	—	1	NEW RELEASE	22/4/2016	DG	AT
	POS	REV	REVISION RECORD	DATE	DWN	APVD

IMPLIED NOTES
BURRS AND SHARP EDGES REMOVED
SCREW THREADS ARE TO AS 1275
DO NOT WORK TO DIMS MARKED REF
SURFACE FINISH 6.3 U.N.O.
DIMS ARE IN mm. DO NOT SCALE

IMPLIED TOLERANCES
HOLE DIA AND LOCATIONS..±0.5mm
DIMENSIONS UP TO 30mm...±1.5mm
DIMENSIONS OVER 30mm....±5%
UP TO A MAX OF.....±5mm
ANGULAR DIMENSIONS.....±5°

TCPN: REFER TABLE
PART Alias UTX/DUL: -
Cat No: REFER TABLE

TITLE: CABLE CLEAT Ø60-Ø70 AND Ø68-Ø81 DOUBLE STRUT NUT

DRAWN: DG | DATE: 22/4/2016
CHECKED: RN | APPROVED: AT

TE Connectivity
2/3 Corella Close
Berkeley Vale NSW 2261 Australia

MATERIAL DESC: -
MATERIAL NO: - | MATL SPEC/STD/DRG NO: - | PROCESS SPEC HEAT TREAT/PLATING NO:

SIZE: A3 | PROJECTION: 3RD ANGLE | SCALE: 1:2 | DRAWING NO: AU34697 | SHEET 1 OF 1 | REV 1

Format: generic_ma3_au_rl.frm
Template: tec_generic_a3_metric_au_rl.drw
Dwg No from Pt Mod Fom Tbl: AU29480

DRAWING NO AU34697

THIS DRAWING IS A CONTROLLED DOCUMENT

THIS INFORMATION IS CONFIDENTIAL AND PROPRIETARY TO TE CONNECTIVITY CORPORATION AND ITS WORLDWIDE SUBSIDIARIES AND AFFILIATES. IT MAY NOT BE DISCLOSED TO ANYONE, OTHER THAN TE CONNECTIVITY PERSONNEL, WITHOUT WRITTEN AUTHORIZATION FROM TE CONNECTIVITY CORPORATION, AUSTRALIA.