© 2024 TE Connectivity. All Rights Reserved.

| REVISIONS | | | | | |
|---|---|---|---|---|---|
| P | LTR | DESCRIPTION | DATE | DWN | APVD |
| | D | REVISED PER ECR-24-197660 | 23JAN24 | R.S | W.H |

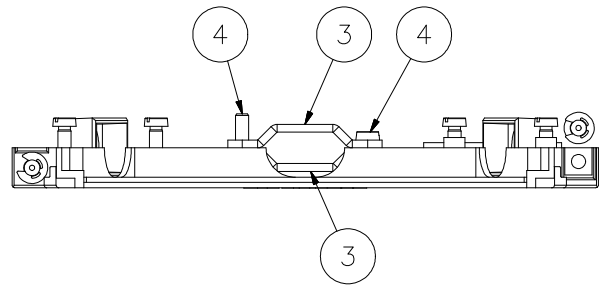


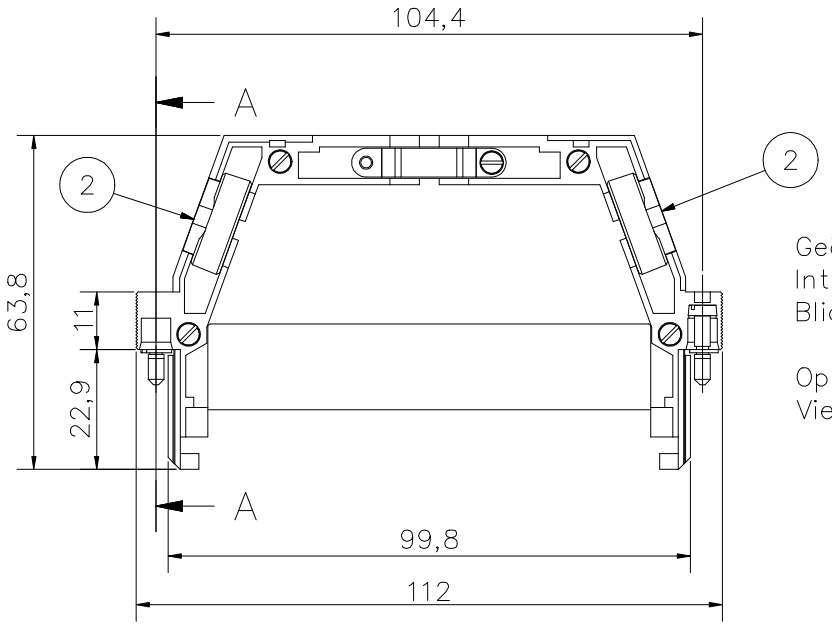


Geöffnetes
Interface-Gehäuse F1
Blick auf Halbschale 1,5TE

Opened InterFace housing F1
View of half-shell 1,5HP

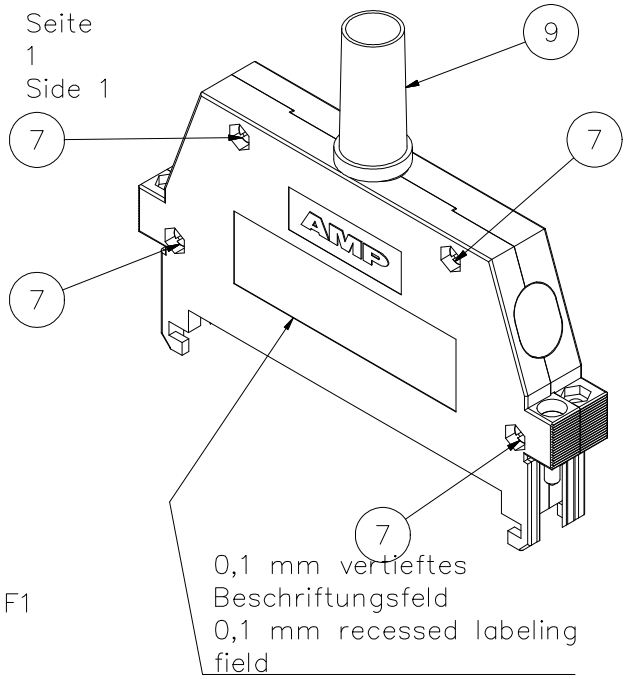


A-A ( 3 : 1 )

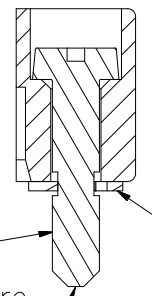

5 6

unverlierbare
Befestigungsschraube
captive fastening screw

1TE/1HP =
5,08

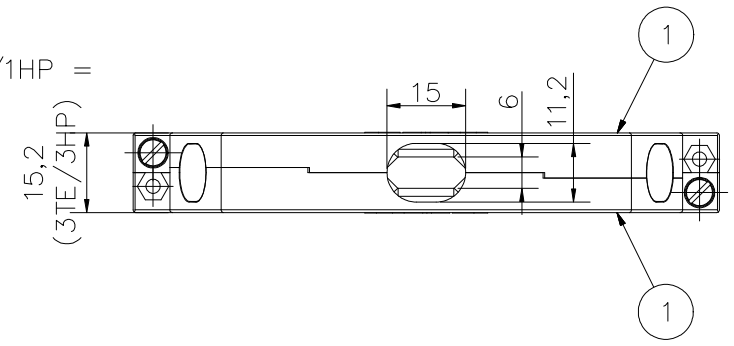


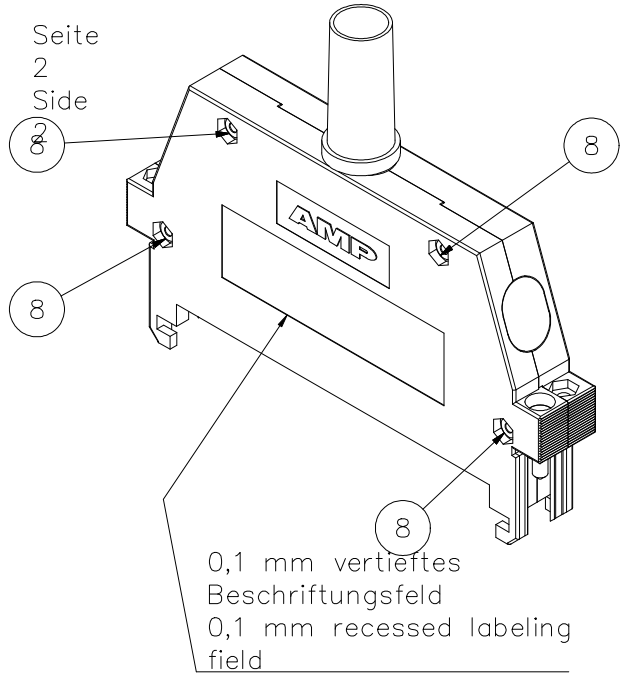


| TABELLE | | |
|---|---|---|
| Pos. pos. | Benennung designation | Stückzahl Quantity |
| 1 | Halbschale InterFace F1; 1,5TE, AMP-Logo<br>half-shell InterFace F1; 1,5HP, AMP-Logo | 2 |
| 2 | Blindstopfen C<br>dummy plug C | 2 |
| 3 | Zugentlastung für Kabelgehäuse<br>strain relief for cable housings | 2 |
| 4 | Zylinderschraube DIN 84; M2,5x8mm; Schlitz<br>cylinder-head screw DIN 84; M2,5x8mm; slotted | 2 |
| 5 | Sonderschraube-Zylinderschraube; M3x13,2mm, Schlitz<br>special cylinder-headed screw; M3x13,2mm, slotted | 2 |
| 6 | Sicherungsscheibe DIN 6799; 2,3<br>lock washer DIN 6799; 2,3 | 2 |
| 7 | Zylinderschraube DIN 84; M2,5x10mm; Schlitz<br>cylinder-head screw DIN 84; M2,5x10mm; slotted | 4 |
| 8 | Sechskantmutter ISO 4032; M2,5<br>hexagon nut ISO 4032; M2,5 | 4 |
| 9 | Kabeltülle B/C/F<br>cable sleeve B/C/F | 1 |

| TE PART NO. |
|---|
| 826198-1 |

THIS DRAWING IS A CONTROLLED DOCUMENT.

DIMENSIONS: mm

TOLERANCES UNLESS OTHERWISE SPECIFIED:
0 PLC ± –
1 PLC ± –
2 PLC ± –
3 PLC ± –
4 PLC ± –
ANGLES ± –

MATERIAL –

FINISH –

DWN SHINDE RUTUJA 04JAN2024
CHK ZI, WILL 18JAN2024
APVD HE, WENKE 18JAN2024
PRODUCT SPEC —
APPLICATION SPEC —
WEIGHT 0

TE Connectivity

NAME COVER FOR TYPE F AND TYPE M 24/7 CONNECTOR
–
–

| SIZE | CAGE CODE | DRAWING NO | RESTRICTED TO |
|---|---|---|---|
| A2 | 00779 | C-826198 | — |

CUSTOMER DRAWING | SCALE 1:1 | SHEET 1 OF 1 | REV D

826198

1471-9 (1/15)