THIS DRAWING IS UNPUBLISHED. RELEASED FOR PUBLICATION -,- .
© COPYRIGHT - BY TYCO ELECTRONICS CORPORATION. ALL RIGHTS RESERVED.

LOC	DIST
GP	00

REVISIONS

P	LTR	DESCRIPTION	DATE	DWN	APVD
	M	REVISE PER 06-025040 ECO	27/OCT/06	ECC	JS

AMPOWER Is a registered trademark of AMP Incorporated.

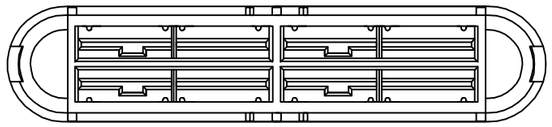

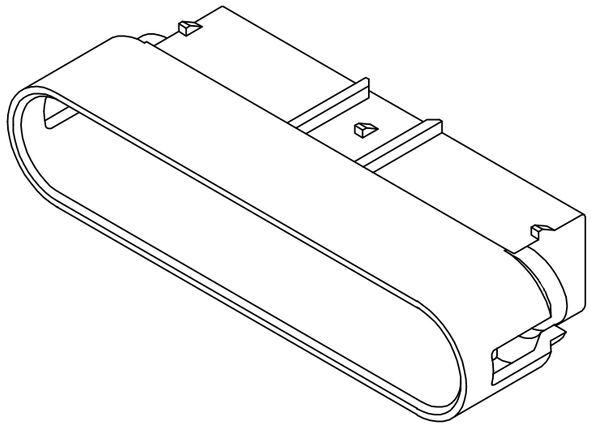

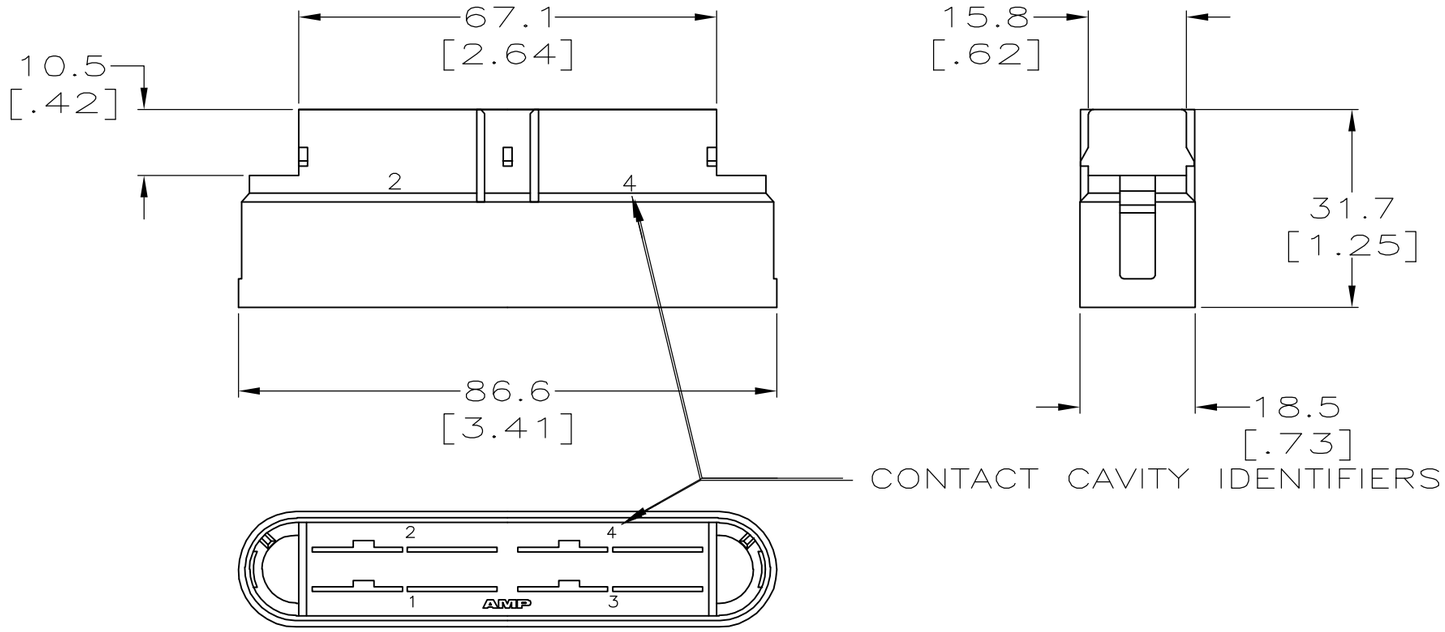

765247-1

THIS DRAWING IS A CONTROLLED DOCUMENT.

DIMENSIONS: mm [INCHES]

TOLERANCES UNLESS OTHERWISE SPECIFIED:

0 PLC	± -
1 PLC	± -
2 PLC	± 0.50 [.010]
3 PLC	± 0.25 [.005]
4 PLC	± -
ANGLES	± -

MATERIAL: BLACK THERMOPLASTIC

FINISH: -

DWN	02-04-90	D. BABOW
CHK	02-05-90	D. SZCZESNY
APVD	-	D.E. PETRIE - 02-05-90
PRODUCT SPEC	108-1319	J. LUCIUS 02-05-90
APPLICATION SPEC	114-49005	
WEIGHT	-	

CUSTOMER DRAWING

tyco Electronics

Tyco Electronics Corporation
Harrisburg, PA 17105-3608

NAME: AMPOWER Wave Crimp System RECEPT, 4 CABLE CONN -

SIZE	CAGE CODE	DRAWING NO	RESTRICTED TO
A3	00779	C-765247	-

SCALE	SHEET	REV
FULL	1 OF 1	M