© – TE Connectivity. All Rights Reserved.

REVISIONS

P	LTR	DESCRIPTION	DATE	DWN	APVD
	AE	ECN–23–230187	08SEP2023	JK	GP

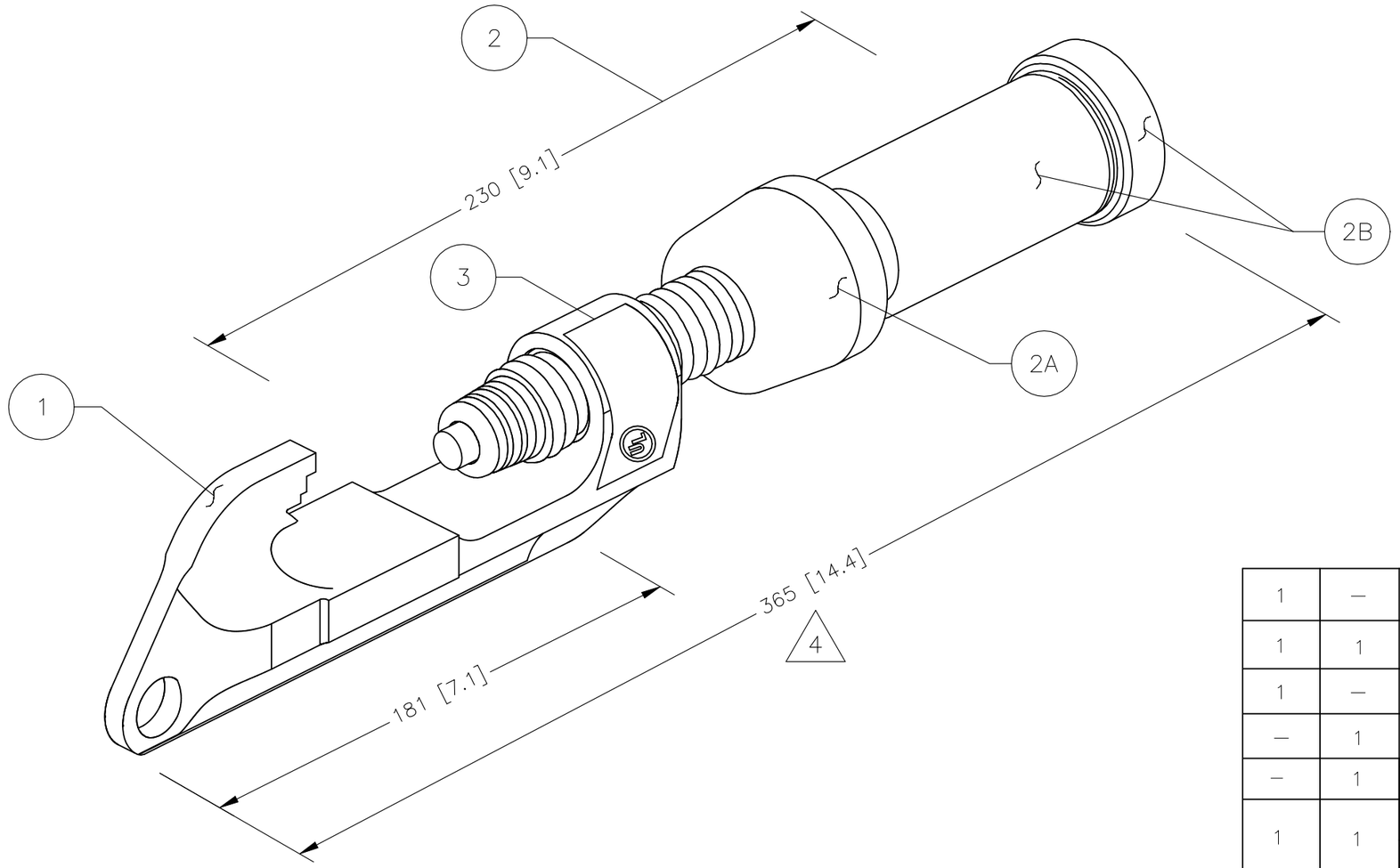

1. FOR INSTALLATION OF RED, WHITE AND BLUE AMPACT TAPS.
2. REFER TO CUSTOMER MANUAL 409–2106 FOR INSTRUCTIONS ON PROPER USE AND MAINTENANCE OF TOOLING.
3. DIMENSIONS ARE FOR REFERENCE ONLY.
4. MAXIMUM OPERATING LENGTH.
5. WEIGHT: 2.36 KG [5.20 LBS].

QTY		DESCRIPTION			ITEM
1	–	PLATFORM			7
1	1	AMPACT CLEANING TOOL			6
1	–	RED AND BLUE TAKE OFF CLIP			5
–	1	WHITE AND BLUE TAKE OFF CLIP			4
–	1	LABEL, UL			3
1	1	2B	BREECH CAP ASSEMBLY	UNIVERSAL POWER UNIT	2
		2A	BREECH ASSEMBLY		
1	1	SMALL TOOL HEAD			1

–3 PARTS LIST

THIS DRAWING IS A CONTROLLED DOCUMENT.

DIMENSIONS: mm [INCHES]

TOLERANCES UNLESS OTHERWISE SPECIFIED:
0 PLC ± –
1 PLC ± –
2 PLC ± –
3 PLC ± –
4 PLC ± –
ANGLES ± –

MATERIAL: STEEL

FINISH: –

DWN M CHOW 04 JUN 98
CHK P CHAN 15 JUL 98
APVD B JOHNSON 27 JUL 98
PRODUCT SPEC –
APPLICATION SPEC –
WEIGHT 5

TE Connectivity

NAME: UNIVERSAL POWER UNIT WITH SMALL TOOL HEAD, AMPACT

SIZE A3 | CAGE CODE 00779 | DRAWING NO C–69437 | RESTRICTED TO –

CUSTOMER DRAWING | SCALE NTS | SHEET 1 OF 1 | REV AE