EC No.	Battery Disconnector 2x500A	Page 1 of 1

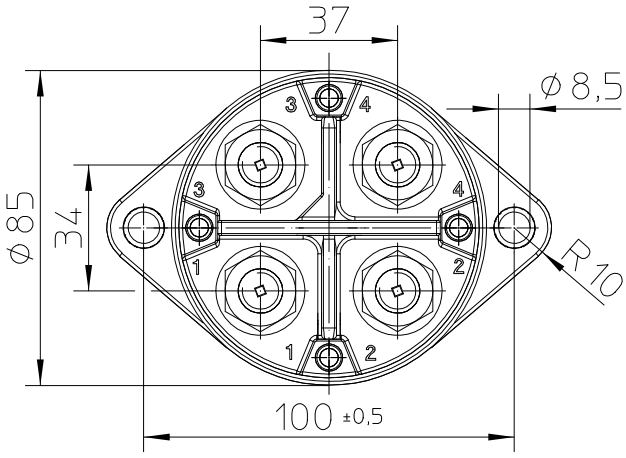

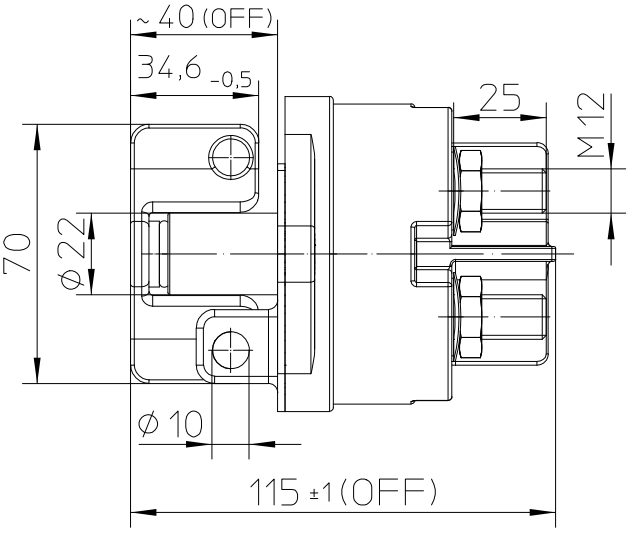

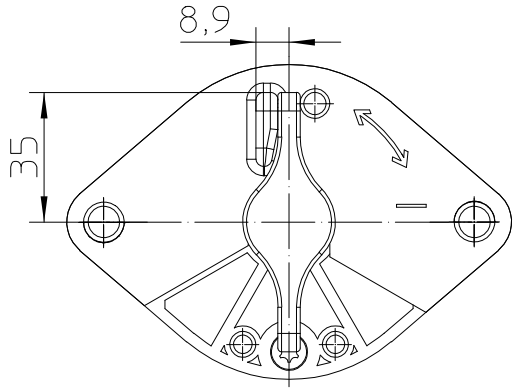

Circuit

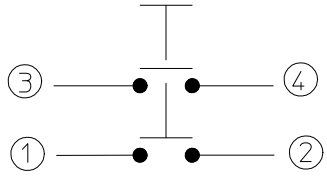

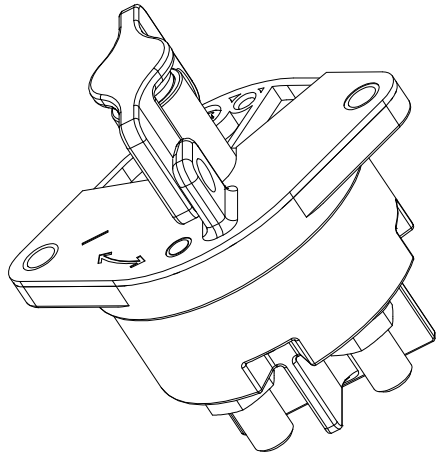

Technical Data

Case Material: Cover.....Vyncolit black
Base Plate.....PA GF black
Switch Lever Material.....PA GF yellow
Min.Insulation Resistance.....100 MOhm
Dielectric Withstanding Voltage.....1050V-1min.
Max. Contact Drop during Resistive Load..150mV
Voltage.....to 32 VDC
Duty Rating.....2x500A
Overload.....2x2000A-1.5min.
.....2x2500A-10sec.
Sealing.....IP 67 / IEC 529
Vibration.....10G,18-500Hz
Shock G-Level.....50G,11ms
Duty Shock-6000Zyklen.....40G,6ms
Weight.....ca. 650g
Temperature Range.....-40°C to +85°C
Wire Section (At Nominal Load).....min.250mm2
Mounting position.....optional
Switch Lever.....not removeable
.....lockable in "0" position
.....not lockable in "I" position
Max. Torque (Main Contacts).....18-22 Nm

	Date	Name	mm	Scale 1:2		Drawing No: 35-524-231-GE-902
Drawn	18.11.2015	Mielk	General Tolerances DIN ISO 2768 cL			
Check	21.11.2017	Grind				NSN.: