EC No.	Battery Disconnector 500A with Aux.	Page 1 of 1

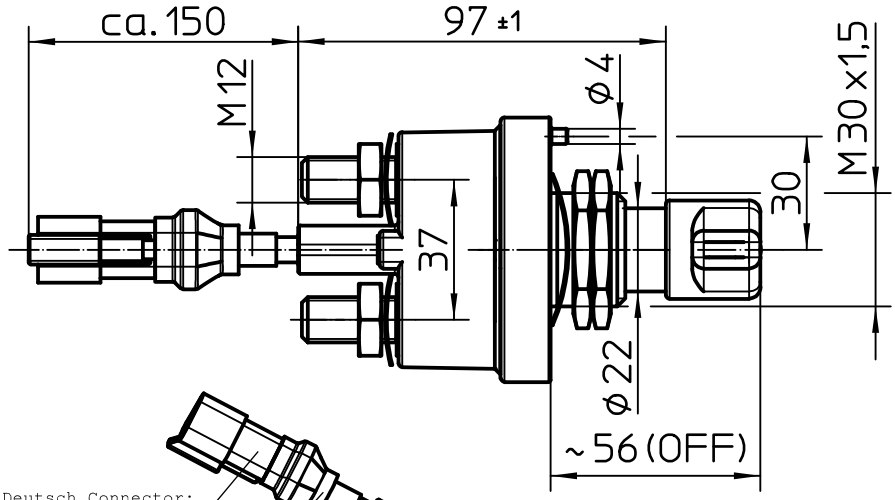

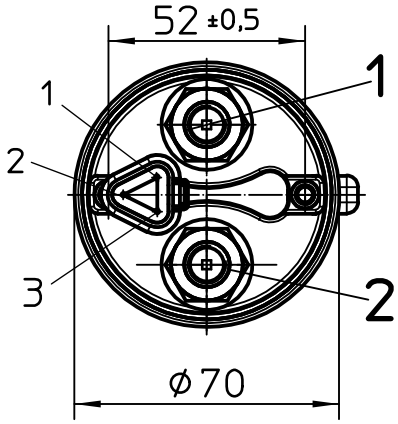

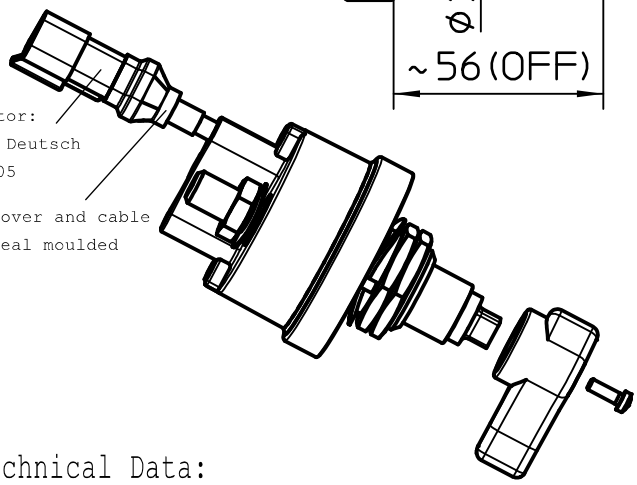

Circuit

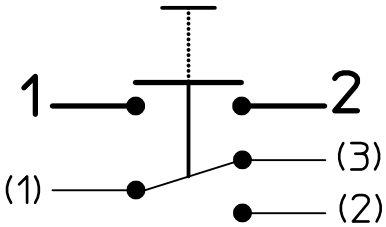

Technical Data:

Case Material: Cover	Vyncolit black
Base Plate	PA GF black
Switch Lever Material	PA GF red
Min.Insulation Resistance	100MOhm
Dielectric Withstanding Voltage	1050V-1min.
Max.Contact Drop During Resistive Load	150mV
Voltage	up to 32VDC
Duty Rating	500A
Overload	1500A-4min.
	2000A-1.5min.
	2500A-10sec.
Auxiliary Contact:	
Continous Current:	10A
Make and Brake:	24V L/R 5ms 10A
	24V L/R 20ms 6A
Sealing	IP 67/ IEC 529
Vibration	4G/ 50-2000Hz
Shock	6G/ 11ms
Weight	340g
Temperature Range	-40°C bis +85°C
Wire Section(at nominal Load Main Terminals)	min. 250mm2
Switch Lever	not removeable,red
Max. Torque (Main Terminals)	18-22Nm

	Date	Name	mm	Scale		Drawing No:
Drawn	17.06.2011	Mielk		1:2	KUSUNG	35-513-251-R-A5-903
Check	26.01.2012	Grind	General Tolerances DIN ISO 2768 cL			NSN.: