© 2019 TE Connectivity. All Rights Reserved.

REVISIONS					
P	LTR	DESCRIPTION	DATE	DWN	APVD
	A	INITIAL RELEASE	30SEP2019	AP	NP
	A1	REVISED PER ECR-20-000660	16JAN2020	AP	FE
	A2	TRIANGLE NOTE 19 ADDED	17OCT2023	PS	AW

SECONDARY LOCKING IN LOCKED POSITION

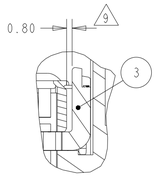

SECONDARY LOCKING IN PRE LOCKED POSITION

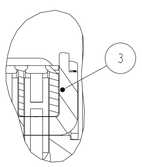

FURTHER CODING

CODE B

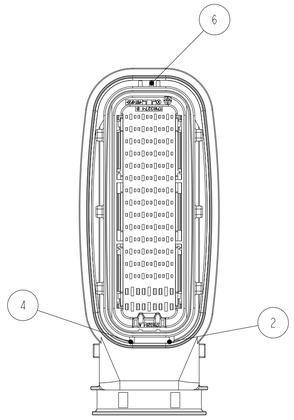

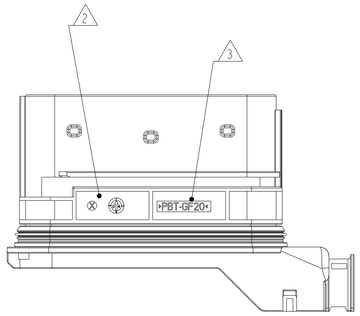

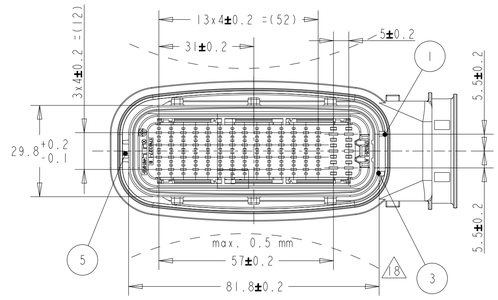

NOTES

1. TE CONNECTIVITY NUMBER AND LOGO
2. PRODUCTION DATE
3. MATERIAL MARKING ACC.TO VDA 260
4. LETTER-INSERT FOR THE REVISION STATUS OF THE MOLD ACTUAL STATUS: SEE TABLE
5. FITS TO TE CONNECTIVITY COUNTERPART AMP MCP1.5/2.8 RECEPTACLE HOUSING. 62 POS. 1-1418883-1, 2-1418883-1
6. FITS TO TE CONNECTIVITY ADAPTER FOR METAL BRACKET 1718329-1
7. FITS TO TE CONNECTIVITY INTERFACE DRAWING 114-18638
8. MOUNTING WITH FIXING SLIDE 1718328-1
9. SLIDING DISTANCE OF SECONDARY LOCKING
10. MATED WITH COVER TE CONNECTIVITY NO. 1418882
11. MAX. CABLE TIE WIDTH: 5mm
12. CAVITY NUMBERING
13. CAVITIES MATED WITH TAB 2.8 x 0.8 MM (SWS) SEE PRODUCT GROUP DRAWING TE CONNECTIVITY NO.: 1355052
    MAX. WIRESIZE: 2.5mm² FLR
    AWG 12 TXL
14. CAVITIES MATED WITH TAB 1.6 x 0.6 MM (SWS) SEE PRODUCT GROUP DRAWING TE CONNECTIVITY NO.: 1355055
    MAX. WIRESIZE: 1.5mm² FLR
    AWG 17 TXL
15. CODING MARKING
16. POLARIZATION
17. WARPAGE TO .... PERMITTED
18. MALFUNCTION CAUSED BY LACQUER IS NOT COVERED BY TE CONNECTIVITY WARRANTY
19. (A2) CABLE OUTLET WITHOUT RIBS FOR WIRE HARNESS WITHOUT CORRUGATED TUBES

CONNECTOR 62POS. INCL. COVER, ADAPTER AND FIXING SLIDE

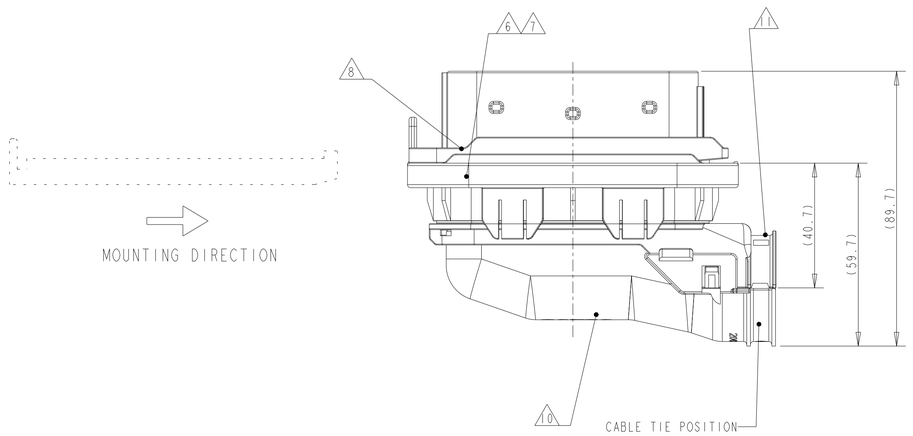

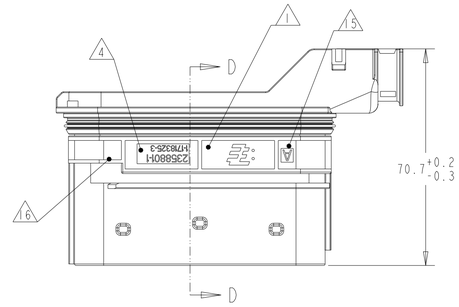

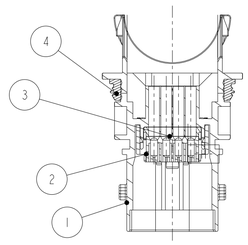

SECTION D-D

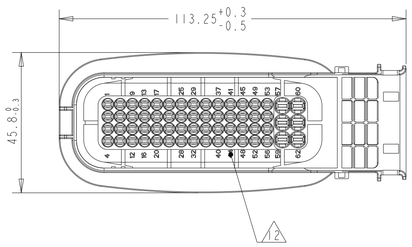

DELIVERY CONDITIONS:

2nd LOCKING DEVICE IN PRE LOCKED POSITION

CODING A AS SHOWN

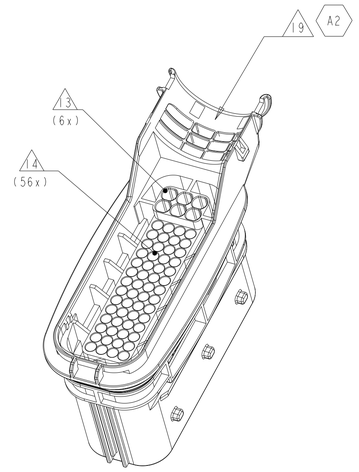

ORDER NO.	CODE	REV.	QTY	MAT.	COLOR	DESCRIPTION	REV.	ITEM
2358801-2	B	A	1	SILICONE	ORANGE	SEAL	A	4
			1	PBT-GF30	YELLOW	SEC. LOCKING DEVICE, 62 POS.	A	3
			1	PBT-GF20	BLACK	CAVITY BLOCK, 62 POS.	B	2
			1	PBT-GF20	GREY	TAB HOUSING, 62POS., CODE B	A	1
2358801-1	A	A	1	SILICONE	ORANGE	SEAL	A	4
			1	PBT-GF30	YELLOW	SEC. LOCKING DEVICE, 62 POS.	A	3
			1	PBT-GF20	BLACK	CAVITY BLOCK, 62 POS.	B	2
			1	PBT-GF20	BLACK	TAB HOUSING, 62 POS., CODE A	A	1

THIS DRAWING IS A CONTROLLED DOCUMENT.

DIMENSIONS: mm

TOLERANCES UNLESS OTHERWISE SPECIFIED: 0 PLC ±; 1 PLC ±; 2 PLC ±; 3 PLC ±; 4 PLC ±; ANGLES ±2°; ACC. TO ISO 8015, ACC. TO DIN 16901-14E

MATERIAL: SEE TABLE

FINISH: SEE TABLE

DWN A. POLO 30SEP2019
CHK I. GRANTCHAROVA 30SEP2019
APVD N. PFAFFMANN 30SEP2019

PRODUCT SPEC 108-18946
APPLICATION SPEC 114-18660
WEIGHT 80 g

TE Connectivity

NAME 1.5/2.8MM TAB HOUSING 62POL., SEALED

SIZE A1 | CAGE CODE 00779 | DRAWING NO C-2358801 | RESTRICTED TO

CUSTOMER DRAWING | SCALE 1:1 | SHEET 1 OF 1 | REV A2

4805 (3/13)