THIS DRAWING IS UNPUBLISHED. RELEASED FOR PUBLICATION -
© COPYRIGHT copyright_date BY - ALL RIGHTS RESERVED.

AFTER ASSEMBLED
ONLY FOR REFERENCE

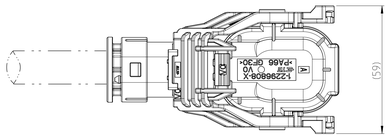

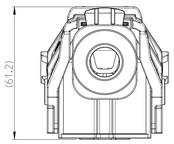

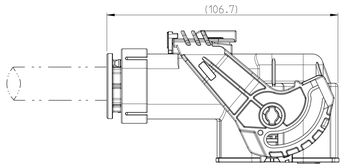

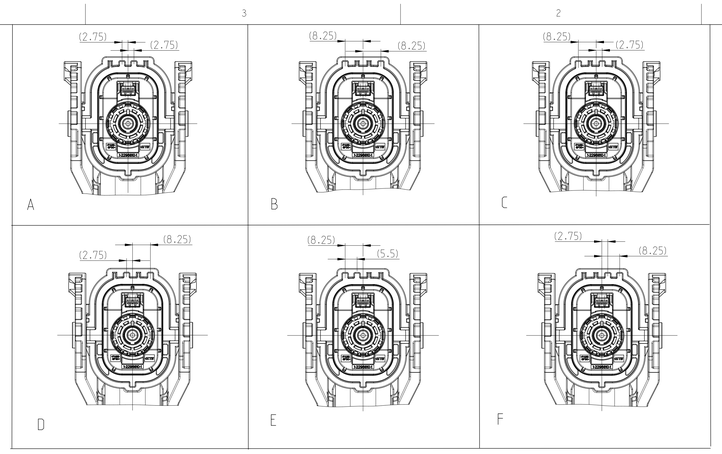

CODINGS

REVISIONS					
P	LTR	DESCRIPTION	DATE	DWN	APVD
	A	RELEASED	18SEP17	JL	IY
			-		-

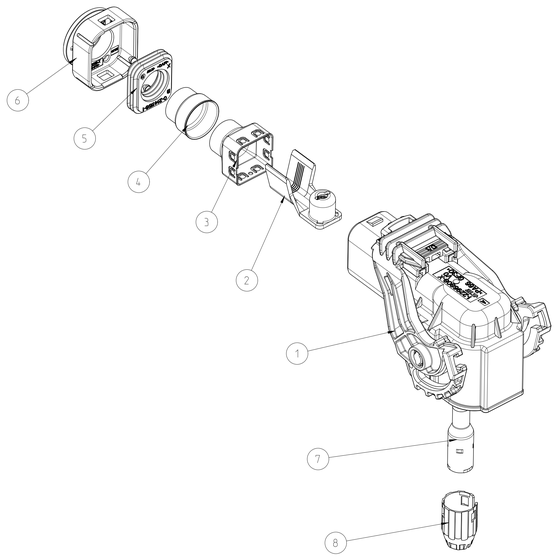

NOTES

1. SPECIFIED WIRE RANGE: SEE TABLE
2. MATING 1POS. HEADER PN: 2324108
3. ALL PLASTIC PARTS USE V0 FIRE RETARDANT MATERIAL

⚠ APPLICATION TEMPERATURE -40°C-125°C

CABLE DIMENSION 35MM² ACC. LV216								QTY PER ASSY							
	-	-	-	-	-	-	1		(1.4)	2303272-2	-	FINGER PROTECTION CAP 8MM HV.90°	PA66-GF UL V0	GRAY	8
	1	1	1	1	1	1	-		(1.4)	2303272-1	-	FINGER PROTECTION CAP 8MM HV.90°	PA66-GF UL V0	ORANGE	
	1	1	1	1	1	1	1		(14.3)	2141212-1	-	DEEP DRAWN SOCKET PIN. 90°	SEE C-2141212	SILVER-PLATED	7
	-	-	-	-	-	-	1		(7.1)	2303018-5	-	PROTECTION COVER	PA66-GF UL V0	GRAY	6
	1	1	1	1	1	1	-		(7.1)	2303018-2	-	PROTECTION COVER	PA66-GF UL V0	ORANGE	
	1	1	1	1	1	1	1		(3)	2141156-2	-	SINGLE WIRE SEAL	MVQ	NATRUE	5
	1	1	1	1	1	1	1		(4.25)	2307011-2	-	SHIELD CRIMP FERRULE.90°	Cu-ALLOY	TIN-PLATED	4
	1	1	1	1	1	1	1		(6)	9-2141158-2	-	SHIELDING SLEEVE.90°	Cu-ALLOY	SILVER-PLATED	3
	1	1	1	1	1	1	1		(21.7)	2141211-2	-	DEEP DRAWN SOCKET 90°	SEE C-2141211	SILVER-PLATED	2
	-	-	-	-	-	-	1		(82.5)	2324138-7	A	P2P 1P PLUG HSG 90DEG ASSY	SEE C-2324138	SEE C-2324138	1
	-	-	-	-	-	1	-			2324138-6	F				
	-	-	-	-	1	-	-			2324138-5	E				
	-	-	-	1	-	-	-			2324138-4	D				
	-	-	1	-	-	-	-			2324138-3	C				
	-	1	-	-	-	-	-			2324138-2	B				
	1	-	-	-	-	-	-			2324138-1	A				
VERSION	CODE A	CODE B	CODE C	CODE D	CODE E	CODE F	CODE A	OPTION (CODE)	MASS (g)	TE ORDER-NO.	CODE	PART DESCRIPTION	MATERIAL	COLOUR	ITEM
	1--1	1--2	1--3	1--4	1--5	1--6	1--7	ASSY PART NO.							

CABLE DIMENSION 50MM² ACC. LV216								QTY PER ASSY							
	-	-	-	-	-	-	1		(1.4)	2303272-2	-	FINGER PROTECTION CAP 8MM HV.90°	PA66-GF UL V0	GRAY	8
	1	1	1	1	1	1	-		(1.4)	2303272-1	-	FINGER PROTECTION CAP 8MM HV.90°	PA66-GF UL V0	ORANGE	
	1	1	1	1	1	1	1		(14.3)	2141212-1	-	DEEP DRAWN SOCKET PIN. 90°	SEE C-2141212	SILVER-PLATED	7
	-	-	-	-	-	-	1		(6.8)	2303018-4	-	PROTECTION COVER	PA66-GF UL V0	GRAY	6
	1	1	1	1	1	1	-		(6.8)	2303018-1	-	PROTECTION COVER	PA66-GF UL V0	ORANGE	
	1	1	1	1	1	1	1		(3)	2141156-1	-	SINGLE WIRE SEAL	MVQ	GREEN	5
	1	1	1	1	1	1	1		(4.25)	2307011-1	-	SHIELD CRIMP FERRULE.90°	Cu-ALLOY	TIN-PLATED	4
	1	1	1	1	1	1	1		(6)	9-2141158-2	-	SHIELDING SLEEVE.90°	Cu-ALLOY	SILVER-PLATED	3
	1	1	1	1	1	1	1		(21.7)	2141211-2	-	DEEP DRAWN SOCKET 90°	SEE C-2141211	SILVER-PLATED	2
	-	-	-	-	-	-	1		(82.5)	2324138-7	A	P2P 1P PLUG HSG 90DEG ASSY	SEE C-2324138	SEE C-2324138	1
	-	-	-	-	-	1	-			2324138-6	F				
	-	-	-	-	1	-	-			2324138-5	E				
	-	-	-	1	-	-	-			2324138-4	D				
	-	-	1	-	-	-	-			2324138-3	C				
	-	1	-	-	-	-	-			2324138-2	B				
	1	-	-	-	-	-	-			2324138-1	A				
VERSION	CODE A	CODE B	CODE C	CODE D	CODE E	CODE F	CODE A	OPTION (CODE)	MASS (g)	TE PART-NO.	CODE	PART DESCRIPTION	MATERIAL	COLOUR	ITEM
	-1	-2	-3	-4	-5	-6	-7	ASSY PART NO.							

CABLE DIMENSION 25MM² ACC. LV216								QTY PER ASSY							
	-	-	-	-	-	-	1		(1.4)	2303272-2	-	FINGER PROTECTION CAP 8MM HV.90°	PA66-GF UL V0	GRAY	8
	1	1	1	1	1	1	-		(1.4)	2303272-1	-	FINGER PROTECTION CAP 8MM HV.90°	PA66-GF UL V0	ORANGE	
	1	1	1	1	1	1	1		(14.3)	2141212-1	-	DEEP DRAWN SOCKET PIN. 90°	SEE C-2141212	SILVER-PLATED	7
	-	-	-	-	-	-	1		(5.6)	2303018-6	-	PROTECTION COVER	PA66-GF UL V0	GRAY	6
	1	1	1	1	1	1	-		(5.6)	2303018-3	-	PROTECTION COVER	PA66-GF UL V0	ORANGE	
	1	1	1	1	1	1	1		(3)	2141156-3	-	SINGLE WIRE SEAL	MVQ	WHITE	5
	1	1	1	1	1	1	1		(4.25)	2307011-3	-	SHIELD CRIMP FERRULE.90°	Cu-ALLOY	TIN-PLATED	4
	1	1	1	1	1	1	1		(6)	9-2141158-2	-	SHIELDING SLEEVE.90°	Cu-ALLOY	SILVER-PLATED	3
	1	1	1	1	1	1	1		(21.7)	2141211-2	-	DEEP DRAWN SOCKET 90°	SEE C-2141211	SILVER-PLATED	2
	-	-	-	-	-	-	1		(82.5)	2324138-7	A	P2P 1P PLUG HSG 90DEG ASSY	SEE C-2324138	SEE 2324138	1
	-	-	-	-	-	1	-			2324138-6	F				
	-	-	-	-	1	-	-			2324138-5	E				
	-	-	-	1	-	-	-			2324138-4	D				
	-	-	1	-	-	-	-			2324138-3	C				
	-	1	-	-	-	-	-			2324138-2	B				
	1	-	-	-	-	-	-			2324138-1	A				
VERSION	CODE A	CODE B	CODE C	CODE D	CODE E	CODE F	CODE A	OPTION (CODE)	MASS (g)	TE ORDER-NO.	CODE	PART DESCRIPTION	MATERIAL	COLOUR	ITEM
	2--1	2--2	2--3	2--4	2--5	2--6	2--7	ASSY PART NO.							

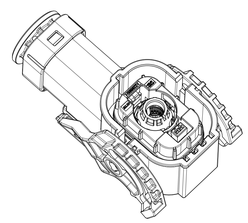

-1 AS SHOWN

THIS DRAWING IS A CONTROLLED DOCUMENT.

DIMENSIONS: mm
TOLERANCES UNLESS OTHERWISE SPECIFIED:
0-PLC ±0.5
1-PLC ±0.1
2-PLC ±0.05
3-PLC ±0.005
4-PLC ±0.0005
ANGLES ±1°
FINISH
MATERIAL

DWN J.LI 21AUG2017
CHK F.JIANG 28AUG2017
APVD IY.IN 18SEP2017
PRODUCT SPEC 108-101439 ⚠
APPLICATION SPEC 114-101062
WEIGHT

TE Connectivity

NAME P2P 1P PLUG HSG 90DEG ASSY
-
-

SIZE A0 | CAGE CODE 00779 | DRAWING NO C-2324136 | RESTRICTED TO -

CUSTOMER DRAWING | SCALE 1:1 | SHEET 1 OF 1 | REV A