THIS DRAWING IS UNPUBLISHED. RELEASED FOR PUBLICATION -
© COPYRIGHT copyright_date BY - ALL RIGHTS RESERVED.

REVISIONS

P	LTR	DESCRIPTION	DATE	DWN	APVD
	A1	ECR-22-144827	04JUL2022	HK	SR
	B	ECR-23-185249	25AUG2023	HK	SR

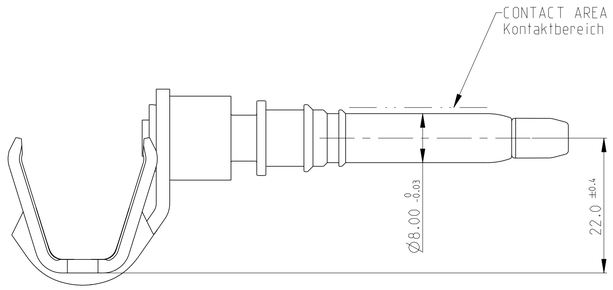

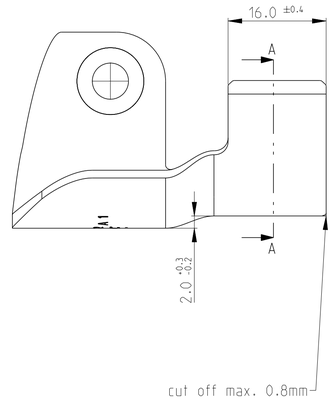

A-A

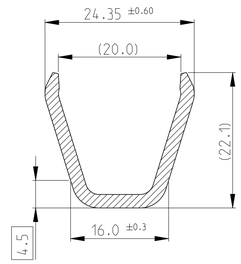

WIRE CRIMP DESIGN
Drahtcrimp Ausfuehrung
2306177-1

MASSSTAB 1:1

A-A

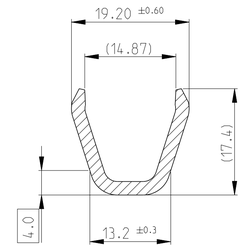

WIRE CRIMP DESIGN
Drahtcrimp Ausfuehrung
2-2306177-1

1:1

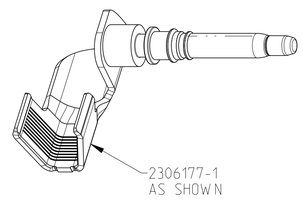

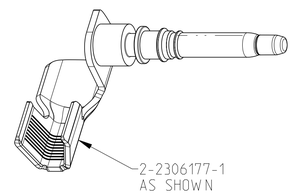

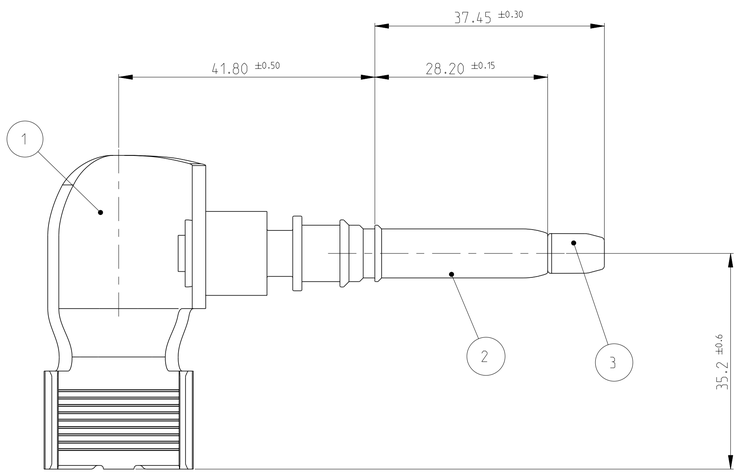

	MATERIAL	FINISH	DESCRIPTION	ITEM NO.	PACKAGING	WEIGHT IN [g]	WIRE RANGE	ASSEMBLY NO:	REV
	PA66		PROTECTION CAP	3	LOOSE PIECE IN TRAY	74	16-25	2-2306177-1	B
B	Cu	6-16 µm Ag IN THE CONTACT AREA A THICKER Ag LAYER IS ALLOWED IF THE LIMIT DIMENSIONS ARE OBSERVED	PIN	2					
	Cu-ETP R220	pre 0.5-2.5 µm TIN PER 112-16-3 over 0.5-2 µm NICKEL PER 112-25-2	BODY	1					
	PA66		PROTECTION CAP	3		82	50-70	2306177-1	B
B	Cu	6-16 µm Ag IN THE CONTACT AREA A THICKER Ag LAYER IS ALLOWED IF THE LIMIT DIMENSIONS ARE OBSERVED	PIN	2					
	Cu-ETP R220	pre 0.5-2.5 µm TIN PER 112-16-3 over 0.5-2 µm NICKEL PER 112-25-2	BODY	1					

THIS DRAWING IS A CONTROLLED DOCUMENT.

DIMENSIONS: mm

TOLERANCES UNLESS OTHERWISE SPECIFIED:
0 PLC ±0.300
1 PLC ±0.200
2 PLC ±0.100
3 PLC ±0.050
4 PLC ±0.050
ANGLES ±0.500

MATERIAL - -
FINISH - -

DWN 20DEC2017 H. Kraenzlein
CHK 20DEC2017 S. Raab
APVD 20DEC2017 M. Burghard
PRODUCT SPEC 108-94556
APPLICATION SPEC 114-94436
WEIGHT -

TE Connectivity

NAME PIN DIA 8.0 TERMINAL 90 DEG
-
-

SIZE A1 | CAGE CODE 00779 | DRAWING NO C-2306177 | RESTRICTED TO

CUSTOMER DRAWING | SCALE 2:1 | SHEET 1 OF 1 | REV B

printed on 29 Aug 2023 07:57 (Mitteleuropäische Zeit) from EG004807