THIS DRAWING IS UNPUBLISHED. RELEASED FOR PUBLICATION 2016
© COPYRIGHT 2016 TE Connectivity Germany GmbH ALL RIGHTS RESERVED.

REVISIONS					
P	LTR	DESCRIPTION	DATE	DWN	APVD
	B2	E-17-018577	20DEC2017	MW	MR
	B3	E-18-010361	03JUL2018	ES	MR
	B4	E-19-011091	16JUL2019	AL	MR
	B5	E-19-012219	02AUG2019	AL	MR

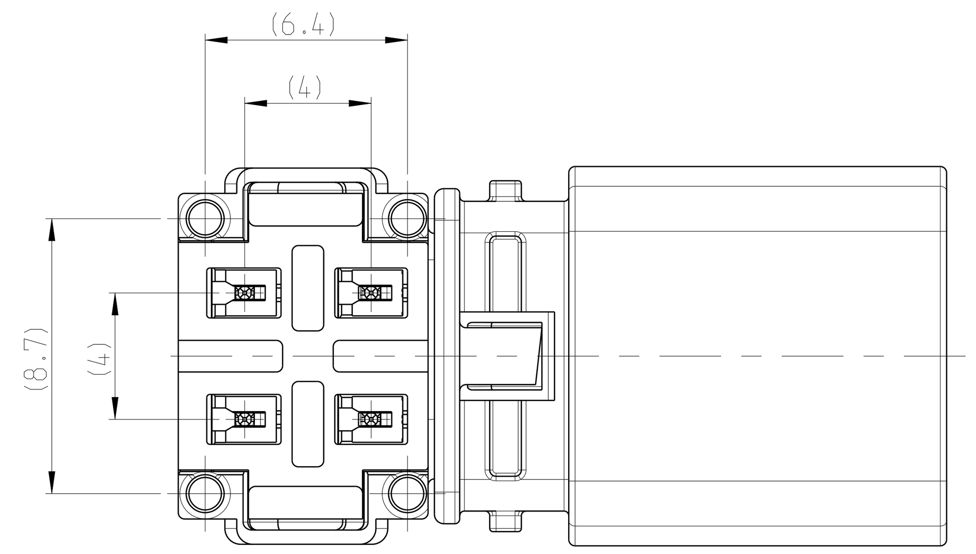

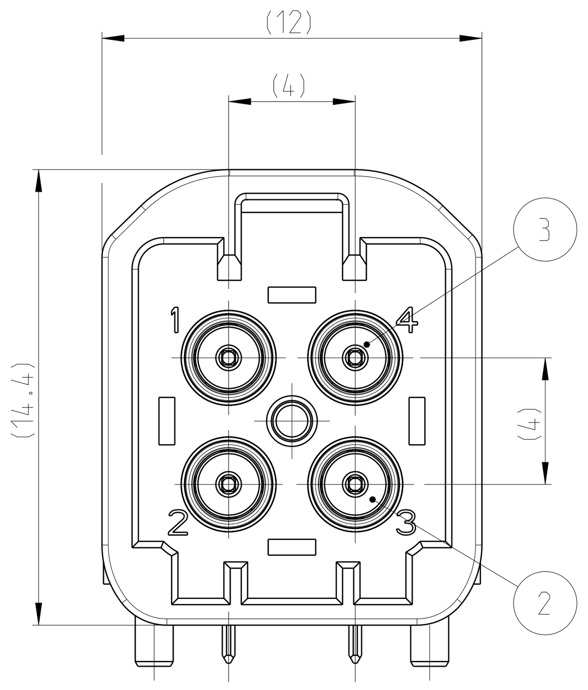

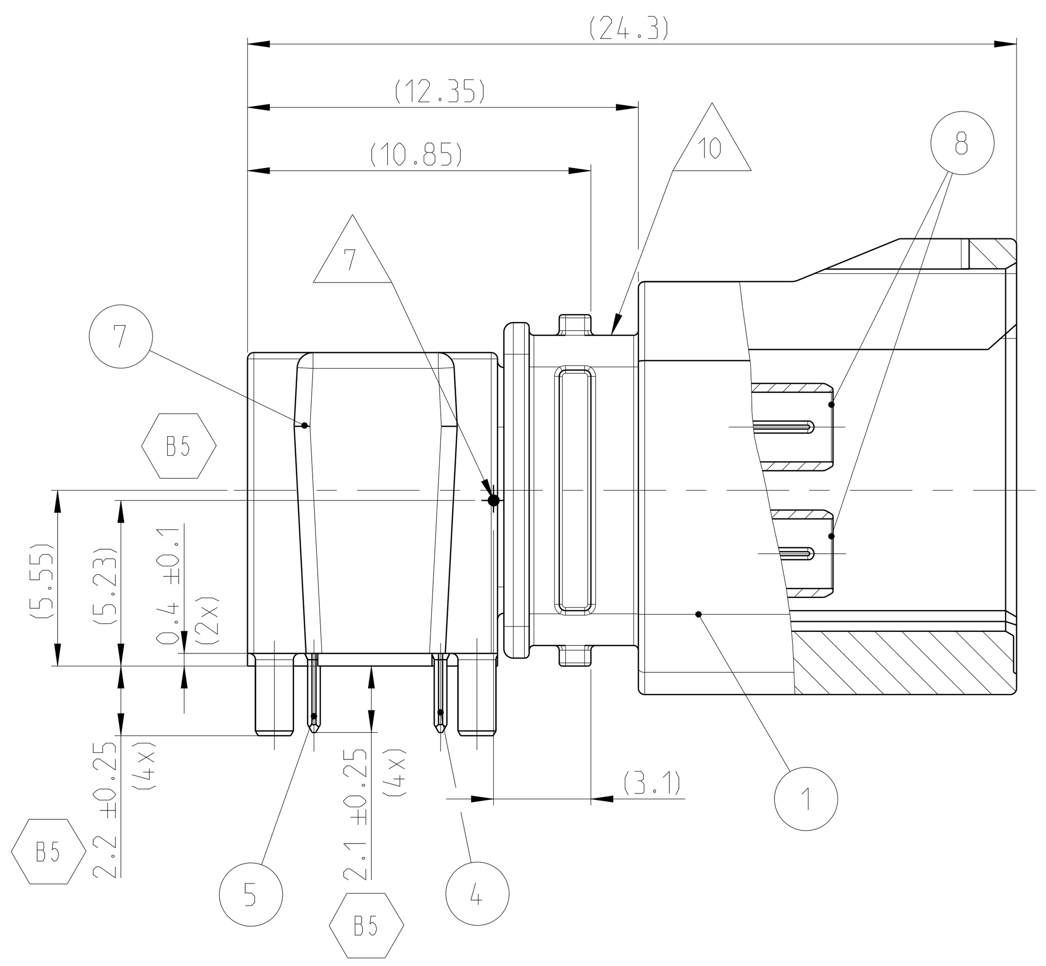

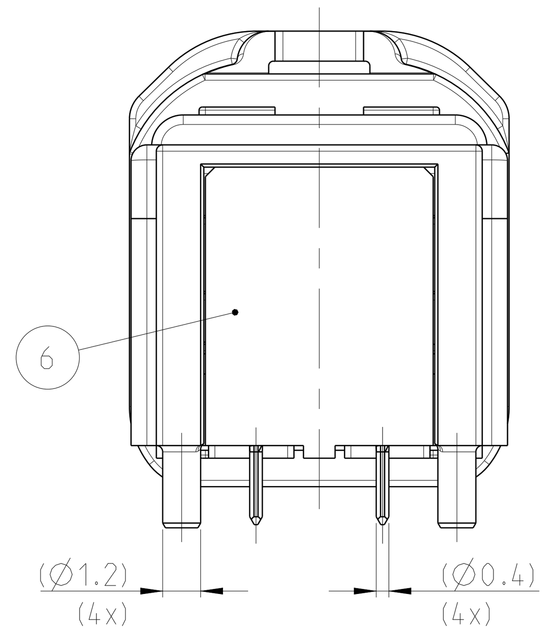

MECHANICAL: FOOTPRINT INFORMATION (HOLE PATTERN):
SEE BELOW SCHEMATIC
Mechanisch: Lochlayout siehe untere Darstellung

ELECTRICAL: HIGHSPEED LAYOUT PROPOSAL
SEE APPLICATION Spec. 114-94443
Elektrisch: Vorlaeufiges Highspeed Layout siehe Appl. Spec. 114-94443

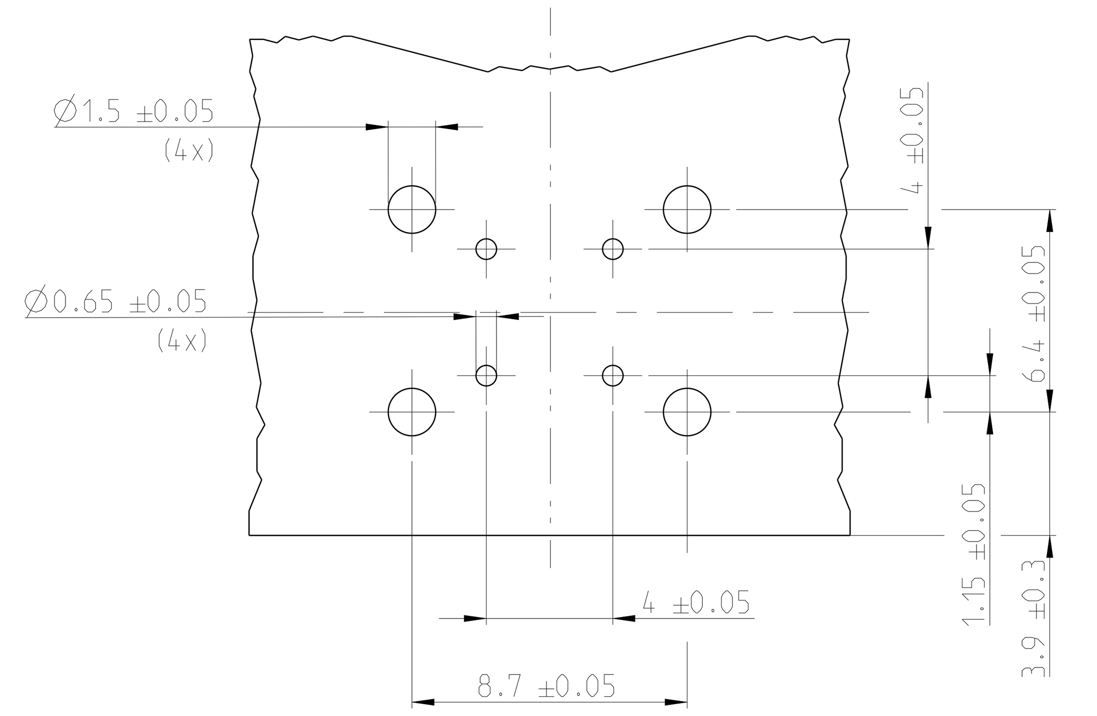

SPACE REQUIREMENTS FOR CABLE CONNECTOR
Platzbedarf fuer Kabelstecker

ONLY FOR INFORMATION
Nur zur Information

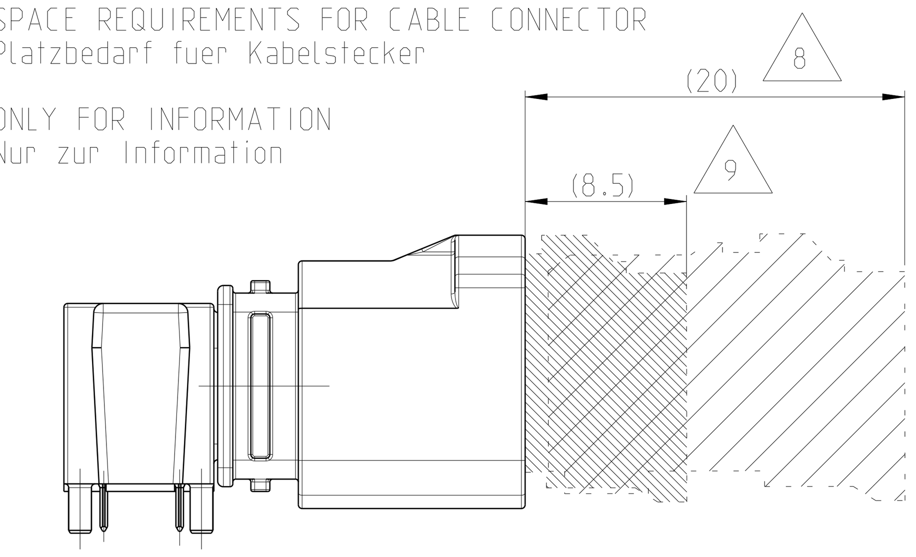

1 ONLY THE GERMAN LANGUAGE SHALL BE BINDING
Massgebend ist der deutsche Text

2 DETAILS OF DESIGN ARE LEFT TO TE CONNECTIVITY
Einzelheiten der Ausfuehrung bleiben TE CONNECTIVITY ueberlassen

3 MATE-AX INTERFACE ACC. TO TE-SPEC. 208-18023
MATE-AX Schnittstelle nach TE-Spez. 208-18023

4 PACKAGING: TAPE AND REEL
Verpackung: Blistergurt

5 FOR FITTING MATE-AX CONNECTOR PLEASE CONTACT TE CONNECTIVITY.
Fuer passenden MATE-AX Gegenstecker bitte TE Connectivity kontaktieren.

6 ALL DIMENSIONS IN BRACKETS () FOR INFORMATION ONLY
Alle Masse in Klammern () nur zur Information

7 CENTER OF GRAVITY
Schwerpunkt

8 REQUIRED SPACE FOR UNMATED CABLE CONNECTOR
Benoetigter Bauraum fuer nicht gesteckten Kabelstecker

9 REQUIRED SPACE FOR MATED CABLE CONNECTOR
Benoetigter Bauraum fuer gesteckten Kabelstecker

10 GOOD PART MARKING AFTER PASSED 100% INSPECTION
Gutteilmarkieung nach bestandener 100% Pruefung

WEIGHT [g]: 8.04
Gewicht [g]: 8.04

AS SHOWN: CODING Z
wie gezeigt: Codierung Z

2:1

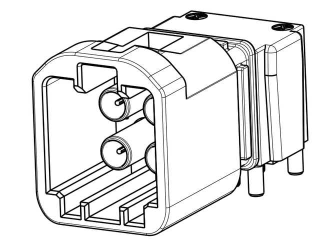

CODINGS, STANDARD ORIENTATION
Kodierungen, Standardorientierung

0-2304168-x

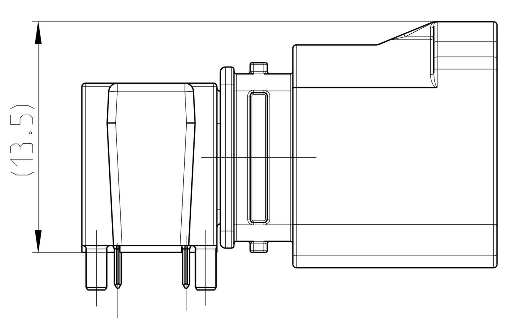

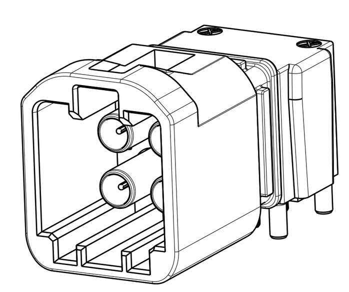

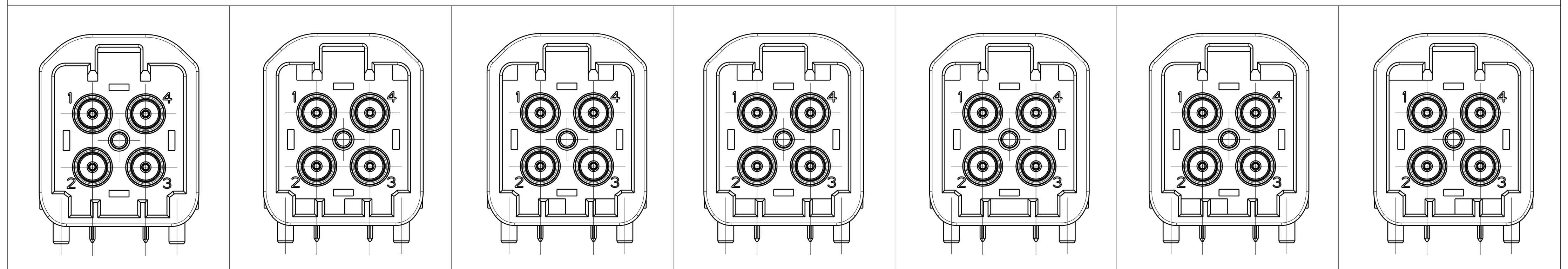

CODING Z	CODING A	CODING B	CODING C	CODING D	CODING E	CODING F

CODINGS, REVERSED
Kodierungen, gedreht

1-2304168-x

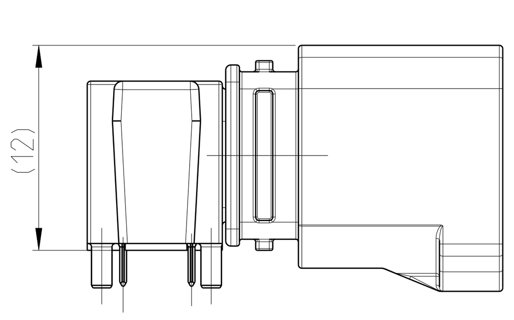

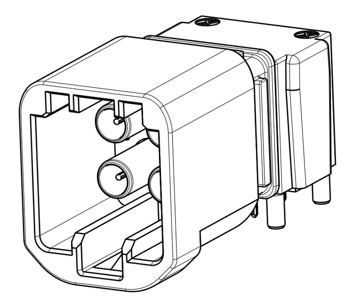

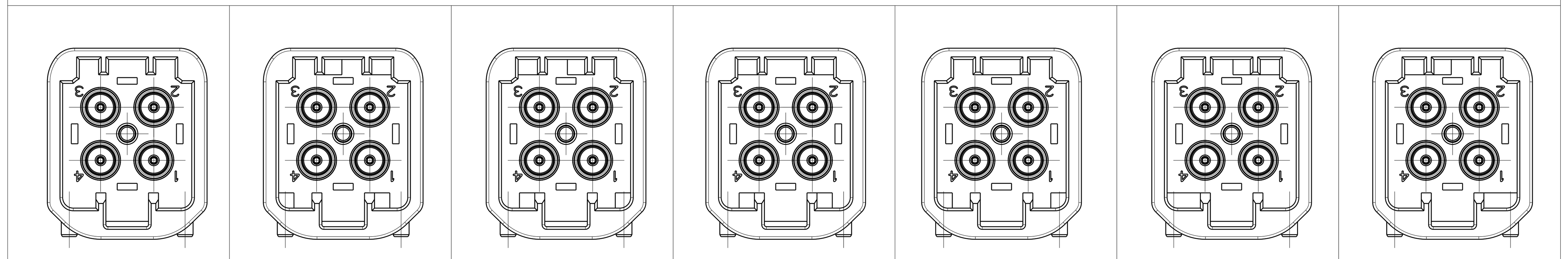

CODING Z	CODING A	CODING B	CODING C	CODING D	CODING E	CODING F

SERIE

QUANTITY							CODE	DESCRIPTION	MATERIAL	FINISH COLOUR	ITEM NO
4								SHIELDING TUBE Schirmrohr	Brass	Sn: MIN. 2µm OVER Ni Sn: min. 2µm ueber Ni	8
1								SHIELDING HOUSING (OUTSIDE) Gehaeuse (aussen)	Zamak 5	Sn: MIN. 3µm OVER Ni Sn: min. 3µm ueber Ni	7
1								SHIELDING HOUSING (INSIDE) Gehaeuse (innen)			6
2								CONTACT PIN (LONG) Kontaktpin (lang)	Phosphorbronze	SOLDER SIDE: MIN. 3µm Sn OVER Ni Lotseite: min. 3µm Sn ueber Ni INTERFACE SIDE: MIN. 2µm Ag OVER Ni Steckseite: min. 2µm Ag ueber Ni	5
2								CONTACT PIN (SHORT) Kontaktpin (kurz)			4
2								CAVITY BLOCK (LONG) Kontakttraeger (lang)	LCP GF30	BLACK	3
2								CAVITY BLOCK (SHORT) Kontakttraeger (kurz)			2
						1	Z	CODING HOUSING Kodiergehaeuse	PA6T/XT-GF35	WATER BLUE / wasserblau	1
					1		F			NUT BROWN / nussbraun	
				1			E			MAY GREEN / maigruen	
			1				D			CLARET VIOLET / bordeauxviolet	
		1					C			LIGHT BLUE / licht blau	
	1						B			PURE WHITE / reinweiss	
1							A			JET BLACK / tiefschwarz	
0-1	0-2	0-3	0-4	0-5	0-6	0-9	SERIE - STANDARD VERSION ASSY NO. 0-2304168-x				
1-1	1-2	1-3	1-4	1-5	1-6	1-9	SERIE - REVERSED VERSION ASSY NO. 1-2304168-x				
A	B	C	D	E	F	Z	ASSY CODE				
B	B	B	B	B	B	B	REVISION				

THIS DRAWING IS A CONTROLLED DOCUMENT.		DWN M.Walter 19OKT2016	TE Connectivity
DIMENSIONS: mm	TOLERANCES UNLESS OTHERWISE SPECIFIED: 0 PLC ±0.5; 1 PLC ±0.5; 2 PLC ±-; 3 PLC ±-; 4 PLC ±-; ANGLES ±-	CHK A.Loecser 19OKT2016	NAME MATE-AX HEADER ASSY 4 POS 90 DEGREE UNSEALD
		APVD M.Reinhardt -	
		PRODUCT SPEC 108-94544	
		APPLICATION SPEC 114-94443	SIZE A1 · CAGE CODE 00779 · DRAWING NO C-2304168 · RESTRICTED TO -
MATERIAL - -	FINISH - -	WEIGHT -	
		CUSTOMER DRAWING	SCALE 5:1 · SHEET 1 OF 1 · REV B5

4805 (3/13)