THIS DRAWING IS UNPUBLISHED. RELEASED FOR PUBLICATION 20
© COPYRIGHT 20 BY - ALL RIGHTS RESERVED.

REVISIONS

P	LTR	DESCRIPTION	DATE	DWN	APVD
	A	RELEASED	16NOV2014	K.L	I.Y

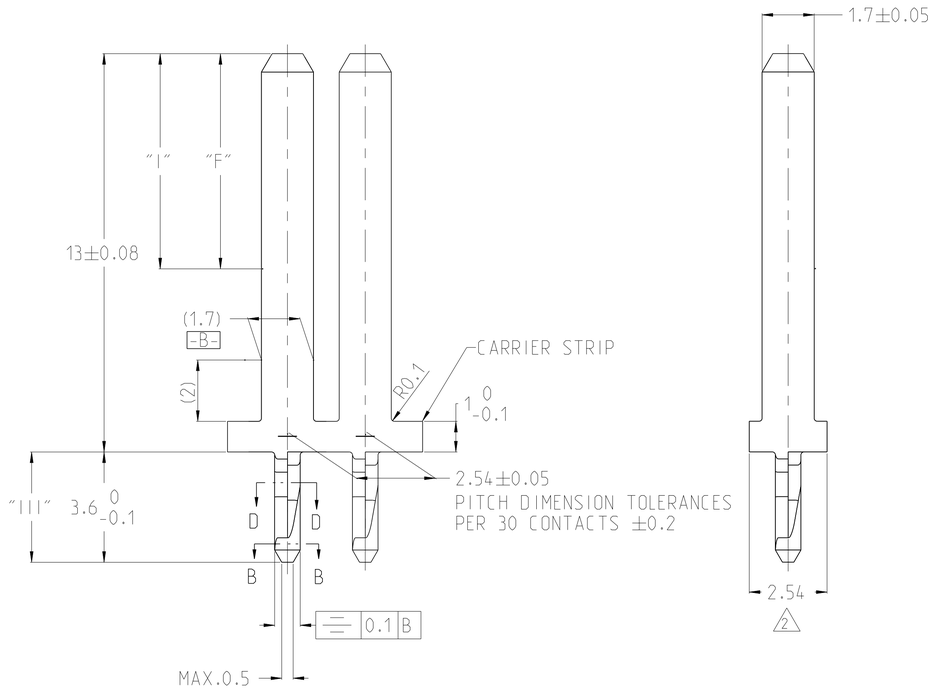

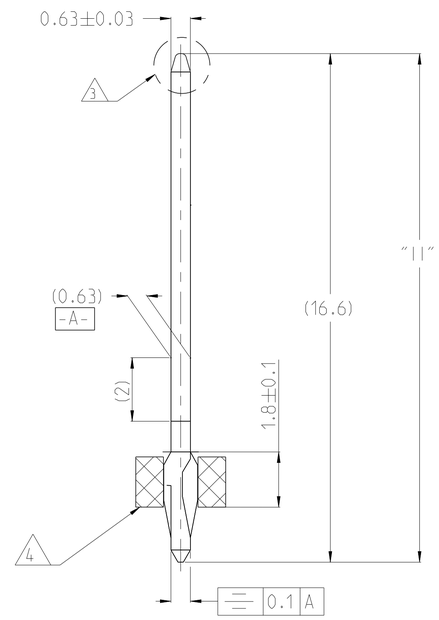

NOTES:

1. MATERIAL SPECIFIED ACCORDING TO UNS C19002
2. STATUS BEFORE INSERTION
3. PERMITTED CAMBER:40 MM/M
4. PRESS-IN AREA FOR 1.6MM PCB, PCB THICKNESS :1.6 ±0.14
5. TAB PLATING SEE THE TABLE 2
6. PACKAGING UNIT:50,000 PCS ON PANCAKE REEL WITH INTELEAVING PAPER 3 REELS IN BOX.
7. DISTORTION OF ACTION PIN TIP 30° MAX
8. TE RECOMMEND PCB: DRILL HOLE 1.15±0.025. PHT-WALL Cu 25-50um. IMMERSION TIN COATING 0.5-1.5um. FINISHED HOLE Ø1.07+0.045/-0.055

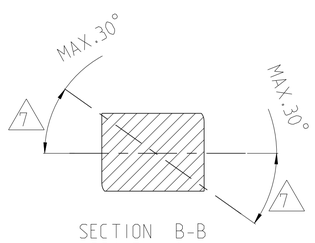

SECTION B-B
SCALE 40:1

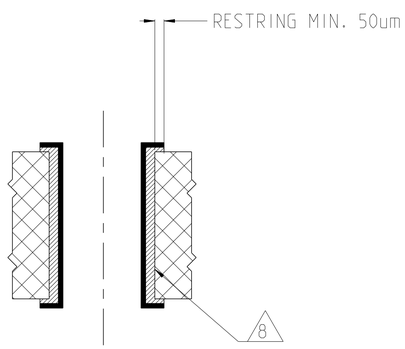

TABLE 2 SURFACE	
ZONE "I" AREA	COAT THICKNESS:1 um TO 3 um Sn
ZONE "II" AREA	COAT THICKNESS:1.3 um TO 2.2 um Ni
ZONE "III" AREA	COAT THICKNESS 0.8 um TO 1.8 um Sn OVER Ni

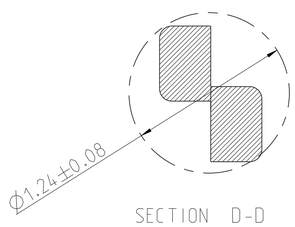

SECTION D-D
SCALE 40:1

REEL DIRECTION
"-"OUTSIDE

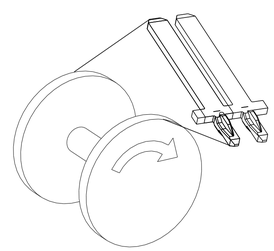

1	7	TIN	2288592-2	A	
MATERIAL IDENT NO.	DIM."F"	SURFACE AREA "F"	PART NO.	REV.	STATUS

THIS DRAWING IS A CONTROLLED DOCUMENT.

DIMENSIONS: mm

TOLERANCES UNLESS OTHERWISE SPECIFIED:
n. ISO 8015
n. ISO 2768-mH-E
0 PLC ±
1 PLC ±
2 PLC ±0.05
3 PLC ±
4 PLC ±
ANGLES ±30'

MATERIAL 1

FINISH -

DWN K.LIANG 5NOV2014
CHK E.JIANG 11NOV2014
APVD I.YIN 16NOV2014
PRODUCT SPEC -
APPLICATION SPEC -
WEIGHT -

TE Connectivity

NAME 1.7x0.63 ACTION PIN FOR 1MM HOLE
-
-

SIZE A1 | CAGE CODE - | DRAWING NO C-2288592 | RESTRICTED TO -

CUSTOMER DRAWING | SCALE 10:1 | SHEET 1 OF 1 | REV A

4805 (3/13)