THIS DRAWING IS UNPUBLISHED. RELEASED FOR PUBLICATION -,- .
© COPYRIGHT - By - ALL RIGHTS RESERVED.

REVISIONS

P	LTR	DESCRIPTION	DATE	DWN	APVD
	A	OFFICIAL VERSION RELEASE	25DEC2016	F.Y	X.X

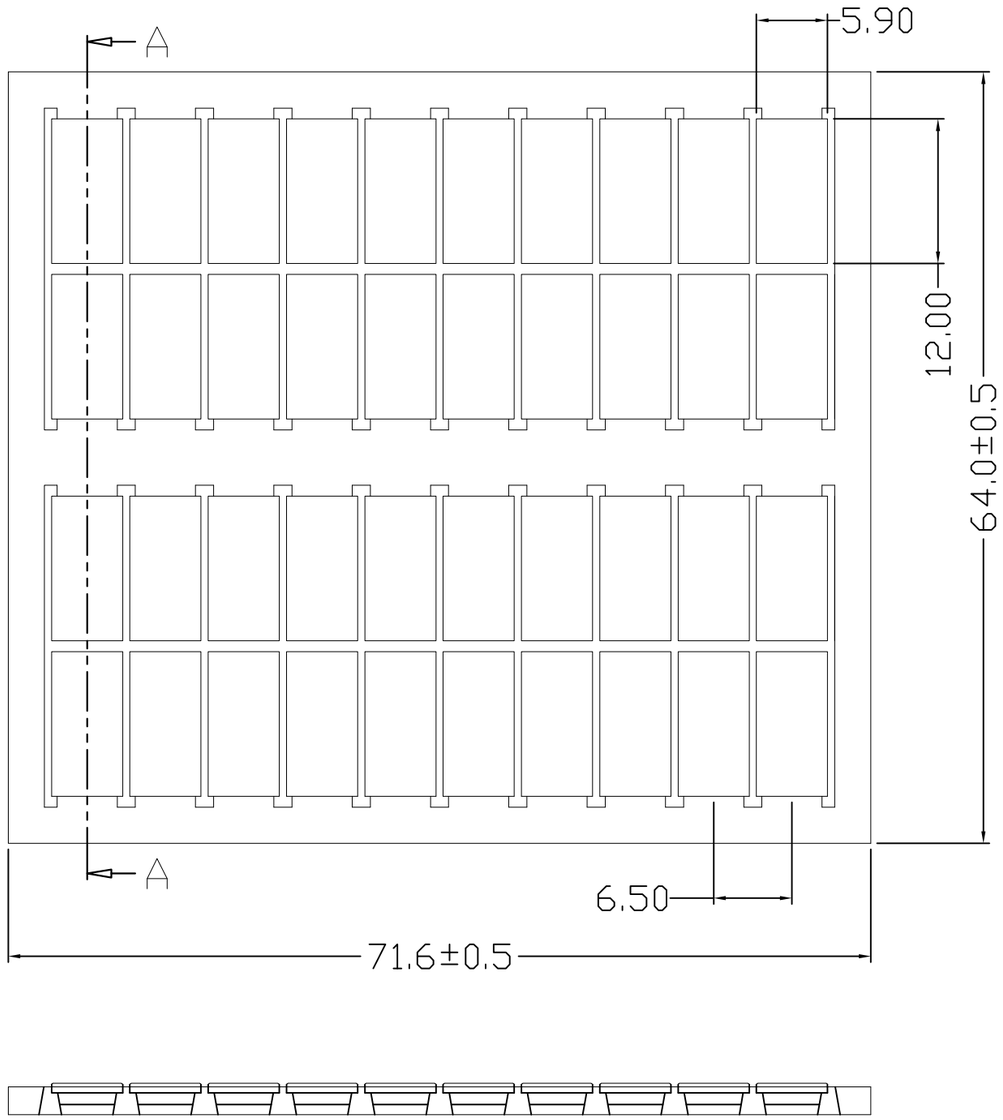

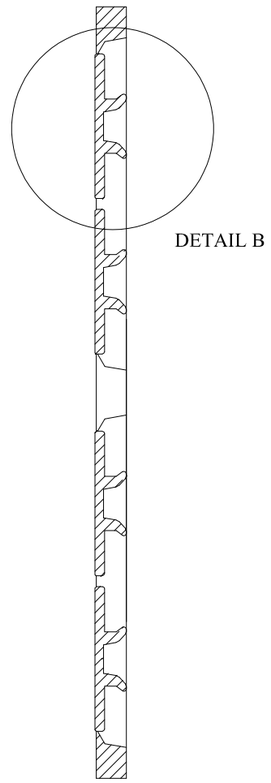

SECTION A-A

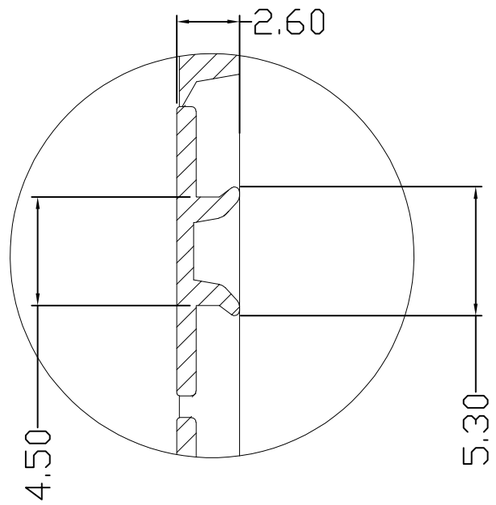

DETAIL B
(SCALE 2:1)

TU-TM 8	2271727-1	40
TE SERIES No.	PART NUMBER	POLES/PC

NOTES:

1. MATERIAL:
   HOUSING:TERMOPLASTIC,UL94 V-0,COLOR:WHITE ,
2. REQUIREMENT FOR ENVIRONMENTAL SUBSTANCES
   MUST BE COMPLIANCE WITH ROHS AND REACH.

THIS DRAWING IS A CONTROLLED DOCUMENT.

DIMENSIONS: mm

TOLERANCES UNLESS OTHERWISE SPECIFIED:
0 PLC ± 0.50
1 PLC ± 0.30
2 PLC ± 0.20
3 PLC ± -
4 PLC ± -
ANGLES ± -

MATERIAL -
FINISH -

DWN FENCER YU 25DEC2016
CHK KOBBY ZHAO 25DEC2016
APVD XIANG XU 25DEC2016
PRODUCT SPEC —
APPLICATION SPEC 114-137172
WEIGHT 9.0 g

TE Connectivity

NAME MARKING LABEL FOR SCREW TYPE TERMINAL BLOCK
—
—

SIZE	CAGE CODE	DRAWING NO	RESTRICTED TO
A3	00779	C-2271727	—

CUSTOMER DRAWING | SCALE 1:1 | SHEET 1 OF 1 | REV A