THIS DRAWING IS UNPUBLISHED. RELEASED FOR PUBLICATION
© COPYRIGHT ALL RIGHTS RESERVED.

REVISIONS

P	LTR	DESCRIPTION	DATE	DWN	APVD
	A	NPR ECR-16-002096	12FEB2016	JC	JL
	A1	REVISED ECR-17-015153	13OCT2017	JC	LSF

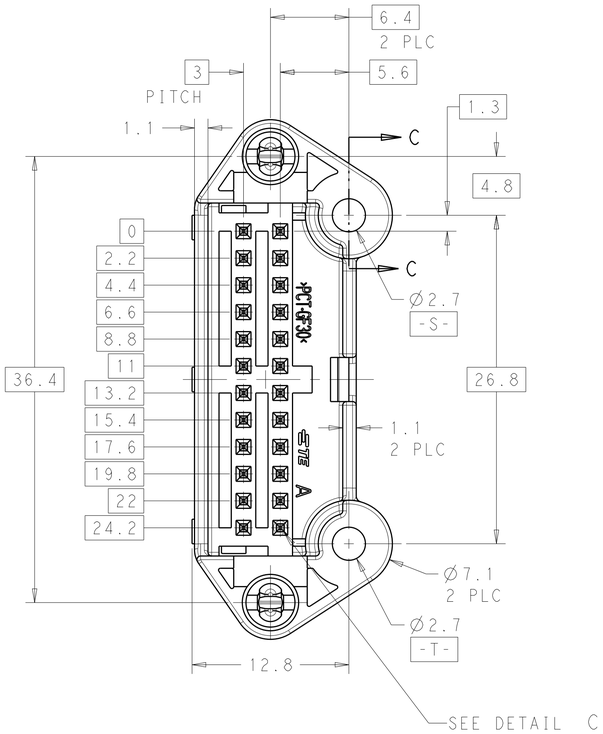

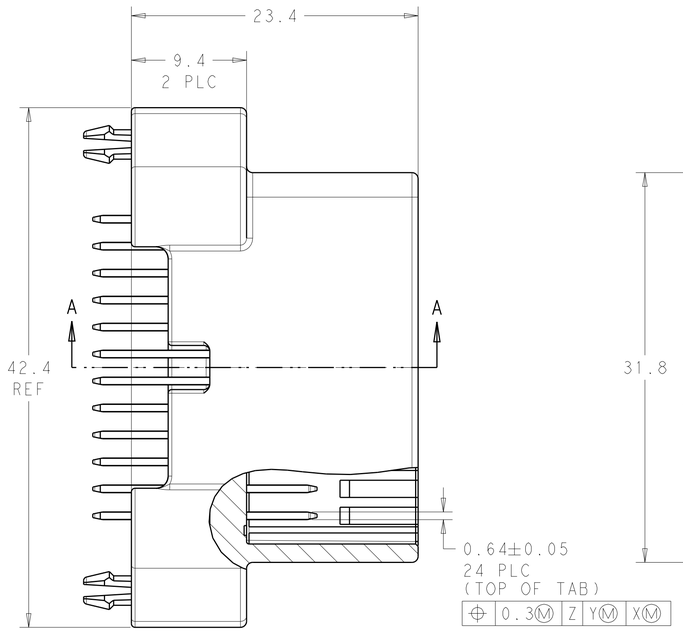

SECTION B-B

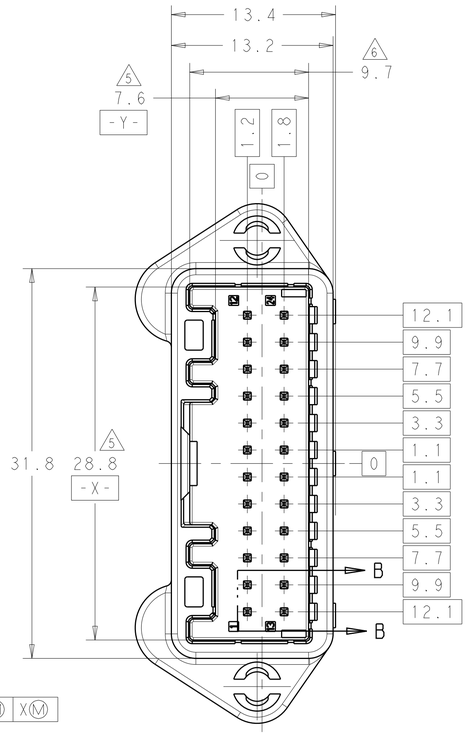

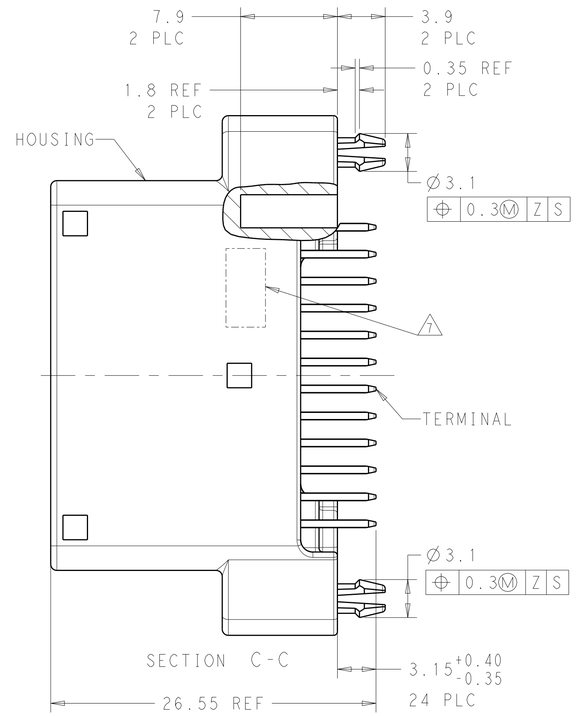

SECTION C-C

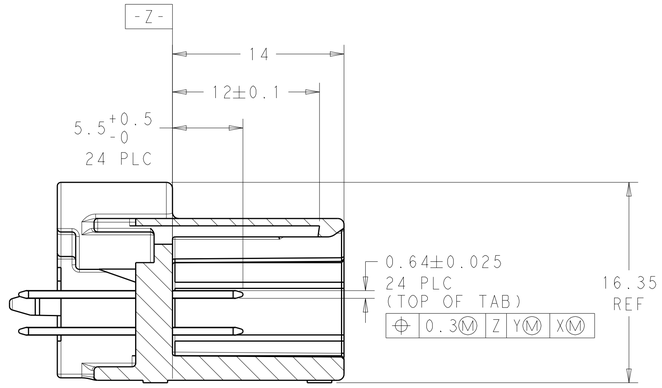

SECTION A-A

TABLE 1

POS	MATING PLUG PART NO
16	1318917
	1717112

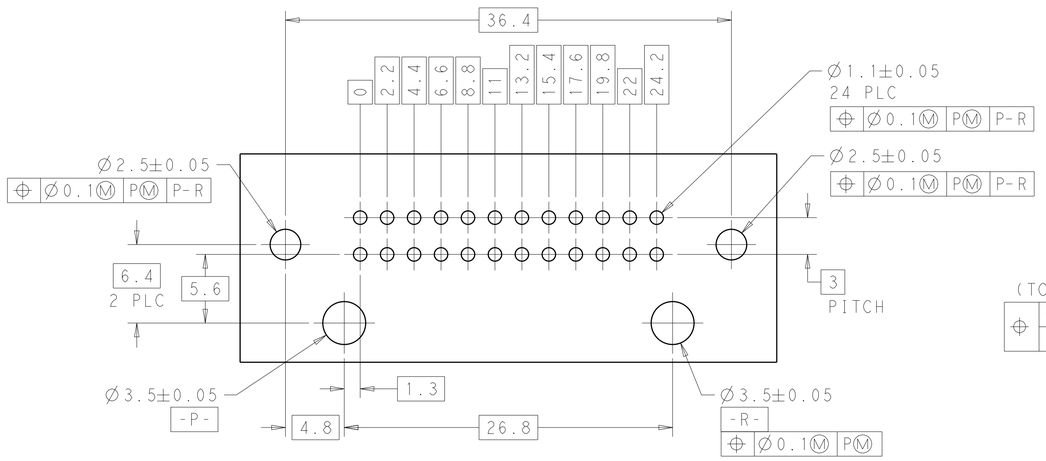

SCALE 4:1
DIMENSION FOR PCB BOARD
PCB THICKNESS 1.6mm

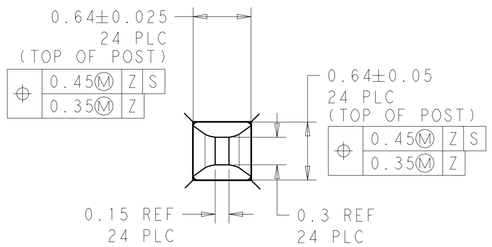

DETAIL C
SCALE 30:1

NOTES:

1. MATING CONNECTOR PART NUMBER: SEE TABLE 1 TO BE MATED SMOOTHLY WITH PLUG ASSEMBLY
2. RECOMMENDED SCREW: PAN-HEADED TYPE 2 TAPPING SCREW OF DIA 3mm X LENGTH 6mm REFER TO JIS B1115, B1122
3. FASTENING TORQUE FOR SCREW (REFERENCE): 0.392N.m MAX
4. INSTRUCTION SHEET NO: 411-51004

5. MEASURED AT 6mm FROM DATUM Z
6. MEASURED AT 2mm FROM DATUM Z
7. DATE CODE AND ASSY ID

BOX	TUBE	PRE-TIN	BRASS	PCT-GF30	BLACK	2237031-1
OUTER	INNER	PLATING	TERMINAL	HOUSING	COLOUR	PART NUMBER
PACKING STYLE			MATERIAL			

THIS DRAWING IS A CONTROLLED DOCUMENT.

DIMENSIONS: mm

TOLERANCES UNLESS OTHERWISE SPECIFIED:
0 PLC ±0.3
1 PLC ±0.3
2 PLC ±0.3
3 PLC ±0.3
4 PLC ±0.3
ANGLES ±3°

MATERIAL: SEE TABLE
FINISH: SEE TABLE

DWN JASON CHOW 12FEB2016
CHK JL LIM 12FEB2016
APVD SF LEONG 12FEB2016
PRODUCT SPEC 108-51110-5
APPLICATION SPEC -
WEIGHT 7.74g

TE Connectivity

NAME 24P 025 CAP ASSEMBLY, V-TYPE

SIZE A1 | CAGE CODE 00779 | DRAWING NO C-2237031 | RESTRICTED TO -

CUSTOMER DRAWING | SCALE 4:1 | SHEET 1 OF 1 | REV A1

4805 (3/13)