© 2020 TE Connectivity. All Rights Reserved.

REVISIONS					
P	LTR	DESCRIPTION	DATE	DWN	APVD
	B	REV PER ECO 20-006305	5-6-20	CT	DH

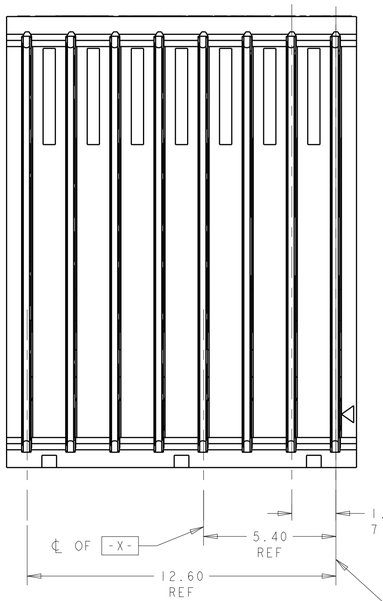

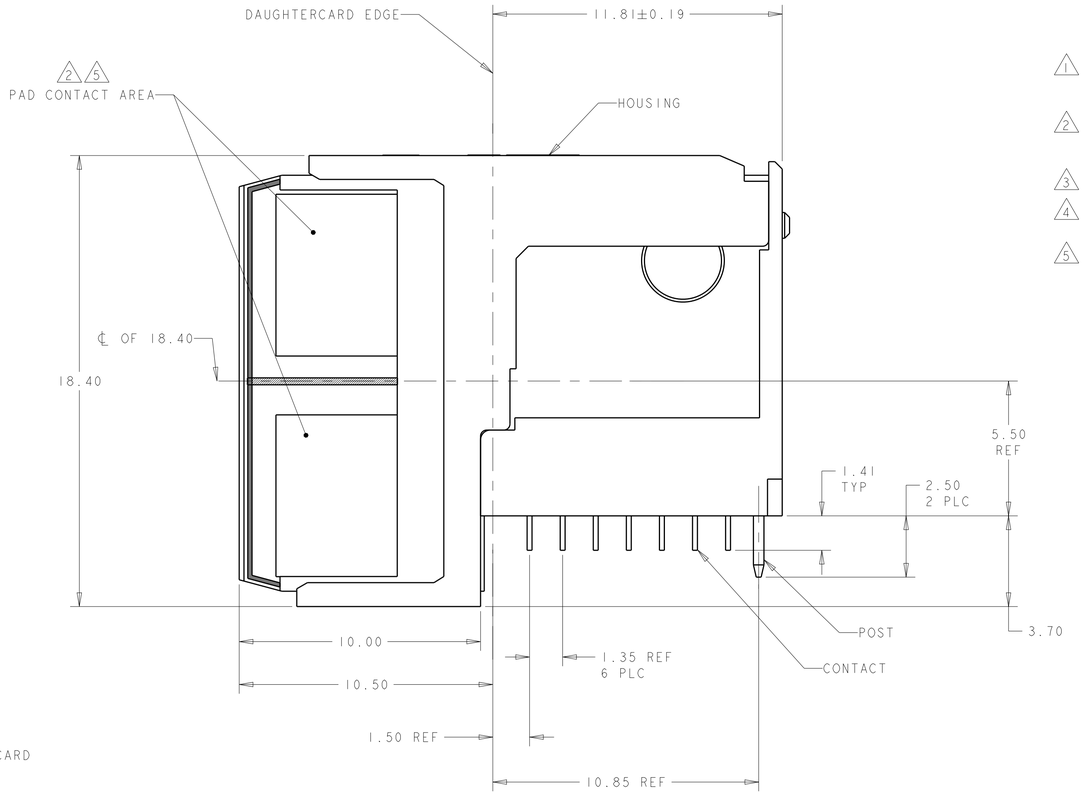

1. HOUSING: LCP, UL94V0, COLOR: BLACK.
   CONTACT: PHOSPHOR BRONZE.
   POST: BRASS WIRE
2. CONTACT: 1.27µm MIN GOLD IN PAD CONTACT AREA, 1.27µm MIN TIN-LEAD ON PCB TAIL OVER 1.27µm MIN. NICKEL OVER ALL.
   POST: 1.27µm MIN NICKEL PLATED.
3. PLATED THROUGH HOLE PER 114-13056, FIGURE 4
4. SEE TABLE 1 FOR INTERCONNECTIONS TO BACKPLANE CONNECTOR.
5. CONTACT: 1.27µm MIN GOLD IN PAD CONTACT AREA, 1.27µm MIN TIN ON PCB TAIL OVER 1.27µm MIN. NICKEL OVER ALL.
   POST: 1.27µm MIN NICKEL PLATED.

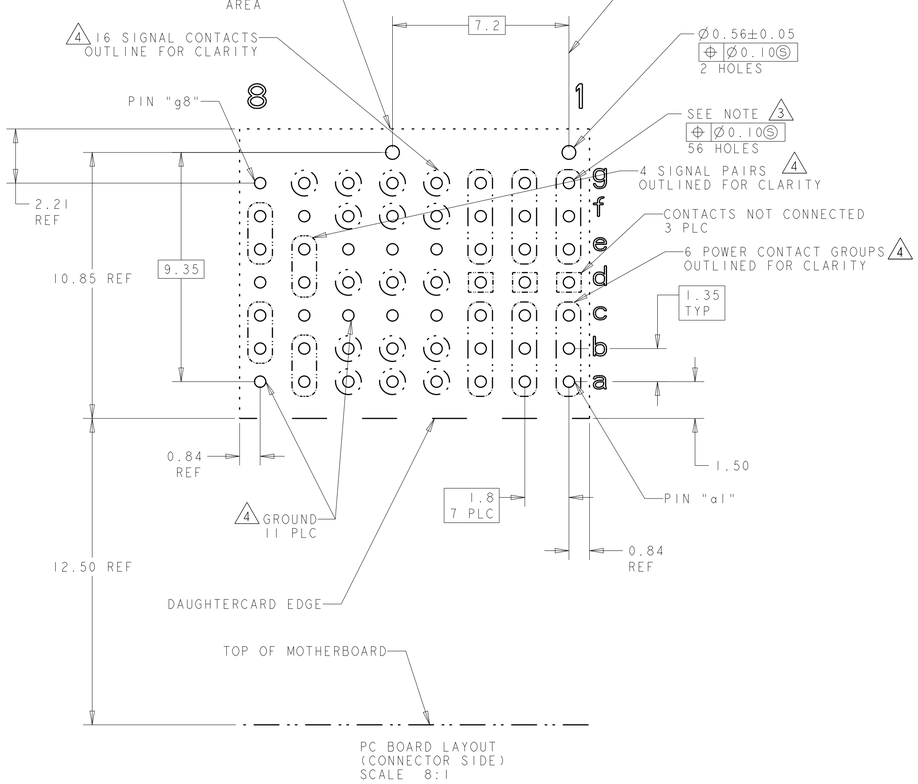

PC BOARD LAYOUT
(CONNECTOR SIDE)
SCALE 8:1

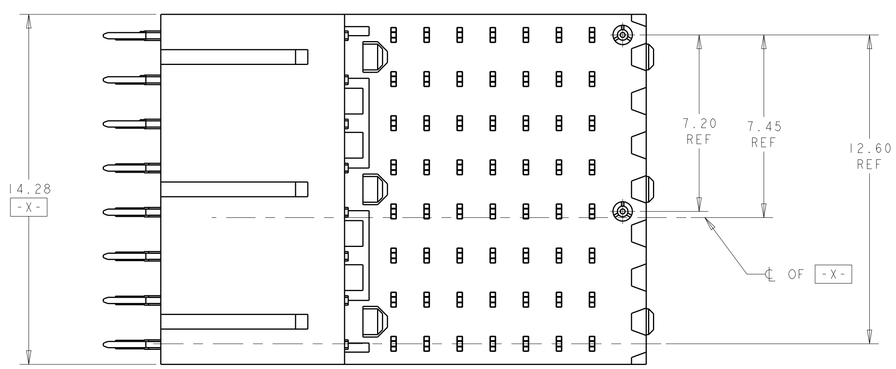

TABLE 1
INTERCONNECTIONS WITH BACKPLANE CONNECTOR 2102735-1

TYPICAL INTERCONNECTIONS FOR COLUMN (WAFER): 8		
CONTACT USAGE	DAUGHTERCARD CONNECTOR PIN	BACKPLANE CONNECTOR PIN
SIGNAL PAIR	bx	cx
	cx	dx
SIGNAL PAIR	ex	gx
	fx	hx
GROUNDS	ax, dx, gx, (ALL COMMONED)	ax, bx, ex, fx, ix

TYPICAL INTERCONNECTIONS FOR COLUMN (WAFER): 7		
CONTACT USAGE	DAUGHTERCARD CONNECTOR PIN	BACKPLANE CONNECTOR PIN
SIGNAL PAIR	ax	ax
	bx	bx
SIGNAL PAIR	dx	ex
	ex	fx
SIGNAL	gx	ix
GROUNDS	cx, fx (ALL COMMONED)	cx, dx, gx, hx

TYPICAL INTERCONNECTIONS FOR EACH COLUMN (WAFER): 4,5,6		
CONTACT USAGE	DAUGHTERCARD CONNECTOR PIN	BACKPLANE CONNECTOR PIN
SIGNAL	ax	bx
SIGNAL	bx	cx
SIGNAL	dx	ex
SIGNAL	fx	gx
SIGNAL	gx	hx
GROUNDS	cx, ex, (ALL COMMONED)	ax, dx, fx, ix

TYPICAL INTERCONNECTIONS FOR EACH COLUMN (WAFER): 1,2,3 POWER WAFERS INCLUDE ESD		
CONTACT USAGE	DAUGHTERCARD CONNECTOR PIN	BACKPLANE CONNECTOR PIN
POWER	ax, bx, cx	ax, bx, cx, dx
POWER	ex, fx, gx	fx, gx, hx, ix
NOT CONNECTED	dx	ex

NOTE: "x" DESIGNATES THE COLUMN NUMBER

5	2226996-2
2	2226996-1
PLATING	PART NO

THIS DRAWING IS A CONTROLLED DOCUMENT.

DIMENSIONS: mm

TOLERANCES UNLESS OTHERWISE SPECIFIED:
0 PLC ±
1 PLC ±0.5
2 PLC ±0.13
3 PLC ±
4 PLC ±
ANGLES ±1°0'

MATERIAL 1

FINISH SEE TABLE

DWN K. MILLER 31MAR2014
CHK A. TSANG 31MAR2014
APVD M. McALONIS 31MAR2014

PRODUCT SPEC 108-2072
APPLICATION SPEC 114-13056
WEIGHT 5.05g

CUSTOMER DRAWING

TE Connectivity

NAME RIGHT-ANGLE PLUG ASSEMBLY, 7 ROW, TRUE HALF SIZE, 20.3mm, MULTIGIG, RT 2-R, DAUGHTERCARD CONNECTOR, VITA 46

SIZE	CAGE CODE	DRAWING NO	RESTRICTED TO
A1	00779	C-2226996	

SCALE 8:1 SHEET 1 OF 1 REV B

4805 (3/13)