THIS DRAWING IS UNPUBLISHED. RELEASED FOR PUBLICATION -
© COPYRIGHT - BY - TE CONNECTIVITY ALL RIGHTS RESERVED.

LOC	DIST
ES	00

REVISIONS

P	LTR	DESCRIPTION	DATE	DWN	APVD
	A3	REV PER ECR-15-005882	20APR2015	ML	SZ
	A5	REV PER ECR-20-017888 RELEASE P/N -2	09MAR2021	ML	SH
	A6	ADD NEW PART NUMBER -3/-4/-11	19MAY2023	ML	WY

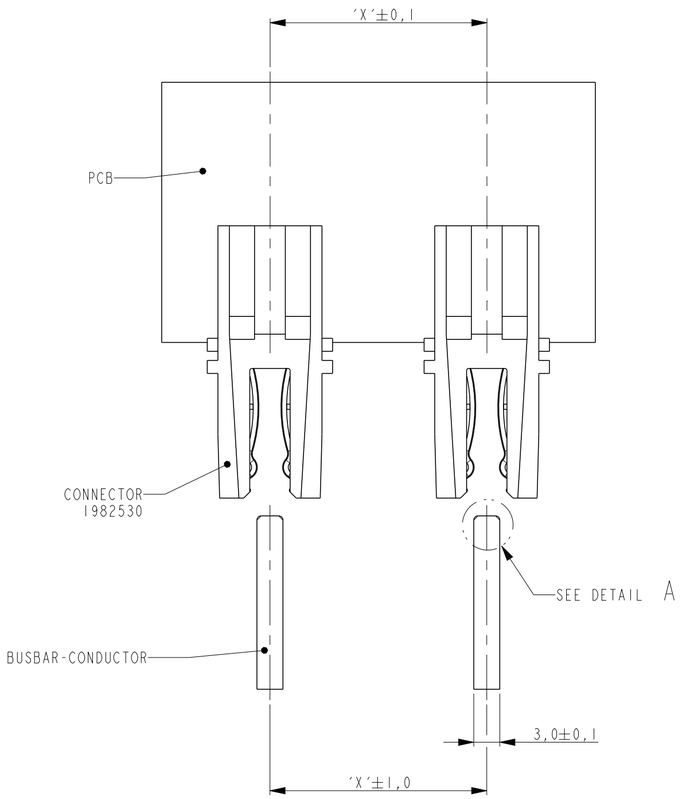

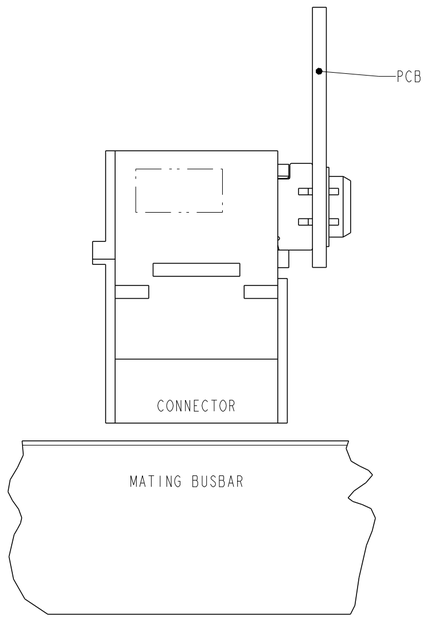

PCB AND MATING BUSBAR REFERENCE VIEW

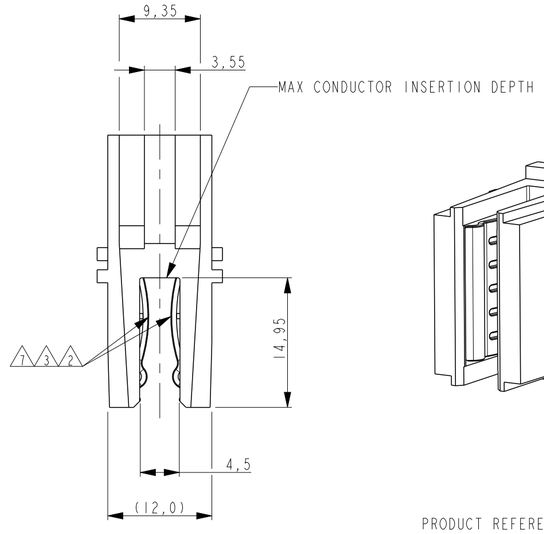

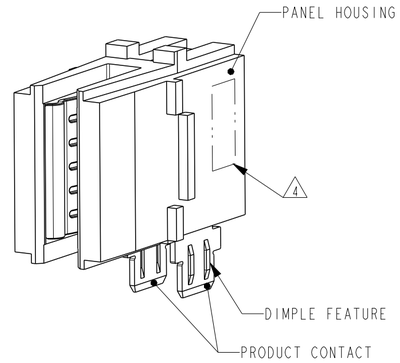

PRODUCT REFERENCE VIEW W DIMPLES
TE P/N: 2178410-1/-3

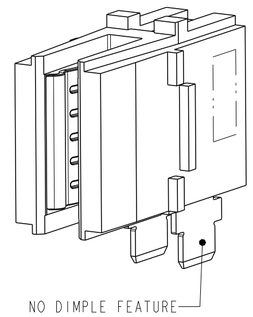

PRODUCT REFERENCE VIEW W/O DIMPLES
TE P/N: 2178410-2

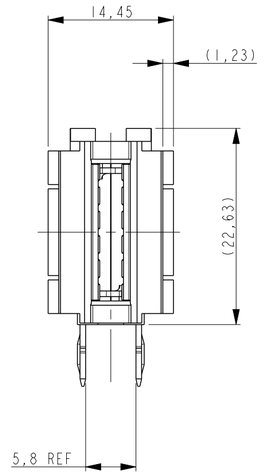

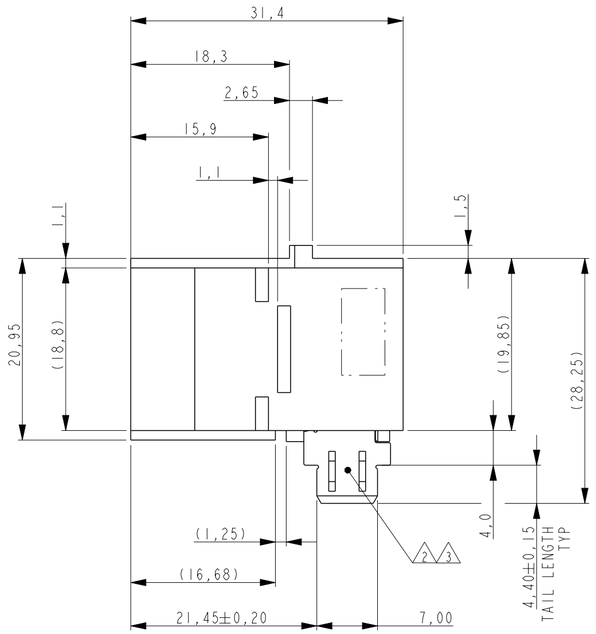

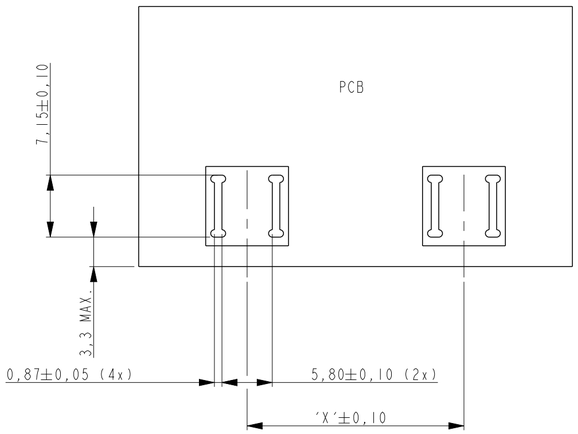

RECOMMENDED PCB LAY-OUT
THICKNESS: 1,5 - 2,0mm

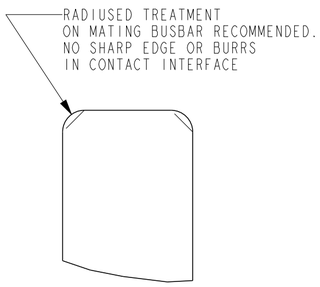

DETAIL A
SCALE 10:1

NOTES:

1. PCB MUST BE SUPPORTED WHILE INSERTING THE CONNECTOR IN THE SLOTS TO AVOID BENDING OF THE BOARD.
2. PLATING: 1,2µm MIN. NICKEL UNDERLAYER ALLOVER.
3. 3,0µm MIN. TIN IN INDICATED AREA.
4. TE P/N AND DATE CODE.
5. MATERIAL:
   POWER CONTACT: HIGH CONDUCTIVITY COPPER ALLOY.
   HOUSING: THERMOPLASTIC, BLACK, UL94 V-0.
6. OTHER RECOMMENDED PCB LAYOUT DESIGN, PLEASE REFER TO DRAWING 2178531
7. 0.76um MIN GOLD PLATING IN PRODUCT CONTACT AREA.

LOW CARBON FOOTPRINT VERSION

PLATING	DIMPLE FEATURE	HALOGEN FREE	DESCRIPTION	TE P/N	NO
2 3	WITH	HALOGEN FREE	CROWN CLIP JUNIOR POWER CONNECTOR	1-2178410-1	5
2 3	WITH	HALOGEN FREE	CROWN CLIP JUNIOR POWER CONNECTOR	2178410-4	4
2 3	WITH	HALOGEN FREE	CROWN CLIP JUNIOR POWER CONNECTOR	2178410-3	3
2 3	WITHOUT	HALOGEN FREE	CROWN CLIP JUNIOR POWER CONNECTOR	2178410-2	2
2 3	WITH	NO-HALOGEN FREE	CROWN CLIP JUNIOR POWER CONNECTOR	2178410-1	1

THIS DRAWING IS A CONTROLLED DOCUMENT.

DIMENSIONS: mm

TOLERANCES UNLESS OTHERWISE SPECIFIED:
0 PLC ±-
1 PLC ±0.3
2 PLC ±0.15
3 PLC ±0.050
4 PLC ±-
ANGLES ±2°

MATERIAL -
FINISH -

DWN SUDHAKAR 12 sep 12
CHK SUDHAKAR 12 sep 12
APVD RAJENDRA 12 sep 12
PRODUCT SPEC 108-19360
APPLICATION SPEC 114-19128
WEIGHT -

TE Connectivity

NAME
PLUGGABLE BUSBAR CONNECTOR
SOLDER VERSION
CROWN CLIP JUNIOR

SIZE	CAGE CODE	DRAWING NO	RESTRICTED TO
A2	00779	C-2178410	-

CUSTOMER DRAWING | SCALE 2:1 | SHEET 1 OF 1 | REV A6