THIS DRAWING IS UNPUBLISHED. RELEASED FOR PUBLICATION 2013
© COPYRIGHT 2013 ALL RIGHTS RESERVED.

| LOC | DIST |
|---|---|
| – | – |

REVISIONS

| P | LTR | DESCRIPTION | DATE | DWN | APVD |
|---|---|---|---|---|---|
| | A | INITIAL RELEASE | 28JUN2013 | CV | JD |

| VOLUME A LAISSER LIBRE POUR ACCOUPLEMENT / DESACCOUPLEMENT *FREE SPACE FOR MATING / UNMATING* | VOLUME MONTE SUR PORTE-LANGUETTES *OVERALL DIMENSIONS MATED ON TAB HOUSING* |
|---|---|

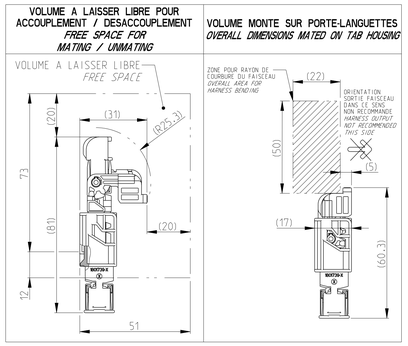


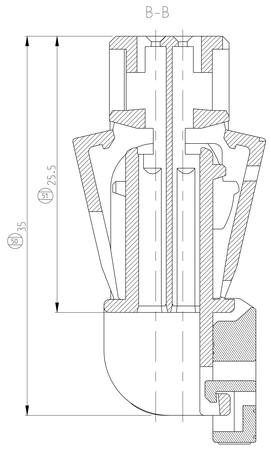


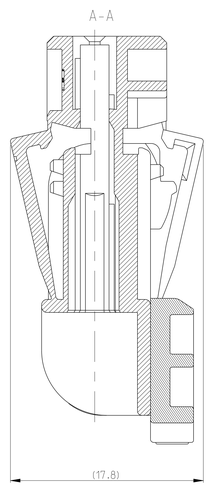


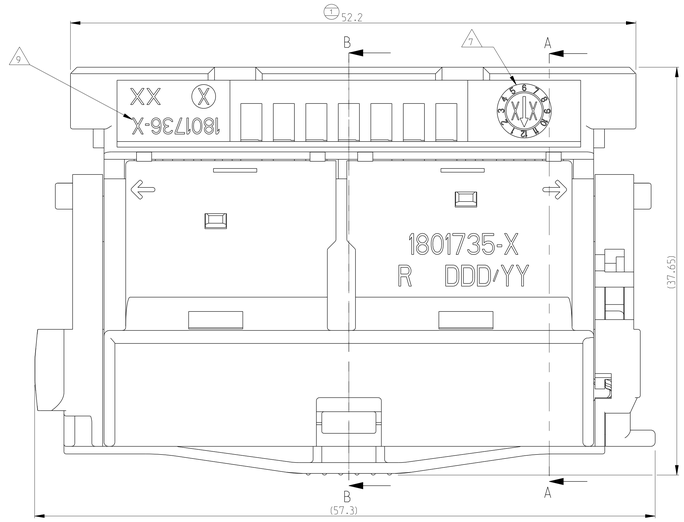


NOTES:

| | | |
|---|---|---|
| 1 | 1801735-1: REPRESENTE | *1801735-1 : AS SHOWN* |
| 2 | COMPATIBLE AVEC ALVEOLES STD. CLIPS MCON 1.2 et 2.8 | *COMPATIBLE WITH CAVITY STANDARD RECEPTACLE MCON 1.2 and 2.8* |
| 3 | CONDITIONNEMENT SUIVANT NORME: E73-03-150G | *PACKAGING IN ACCORDANCE WITH STANDARD : (SEE BEFORE)* |
| 4 | REPERE ALVEOLES | *CAVITY NUMBER* |
| 5 | LOGO TE | *TE STAMP* |
| 6 | IDENTIFICATION MATIERE | *MATERIAL IDENTIFICATION* |
| 7 | DATE DE MOULAGE | *MOLDING DATE CODE* |
| 8 | N° EMPREINTE DU MOULE | *MOLD CAVITY IDENTIFICATION* |
| 9 | REFERENCE COMPOSANTS | *COMPONENTS PART NUMBER* |
| 10 | CAHIER DE PRECONISATION : 408-15014 | *INSTRUCTION SHEET : (SEE BEFORE)* |
| 12 | INDICE DE REVISION COMPOSANTS | *PART REVISION CODE* |
| 13 | REF. DU PRODUIT ASSEMBLE | *ASSEMBLY PART NUMBER* |
| 14 | IND. DE REV. DU PRODUIT ASSY | *ASSEMBLY PART REVISION CODE* |
| 15 | DATE D'ASSEMBLAGE | *ASSEMBLY DATE CODE* |
| 16 | LOGO POUR ORIENTATION DU CONTACT | *LOGO FOR CONTACT ORIENTATION* |
| 17 | COMPATIBLE AVEC CLIPS MCON 1.2 LL 1452674 | *COMPATIBLE WITH MCON 1.2 LL RECEPTACLE 1452674* |
| 18 | COMPATIBLE AVEC CLIPS MCON 2.8 1719797 | *COMPATIBLE WITH MCON 1.2 RECEPTACLE 1719797* |

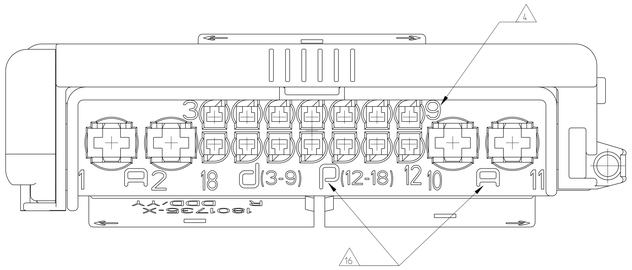


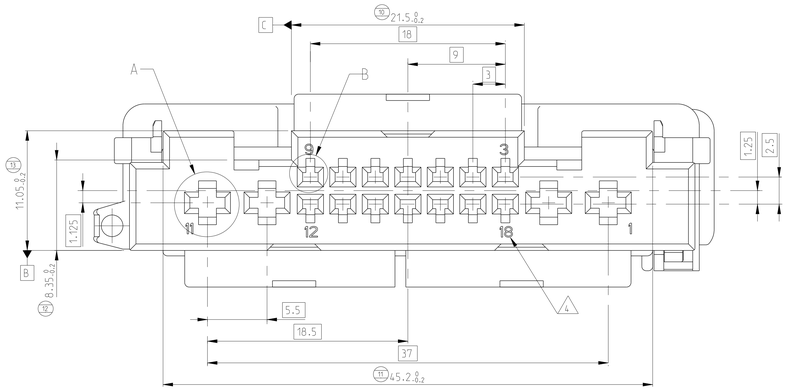


COMPOSANTS ASSOCIES / ASSOCIATED COMPONENTS

| SERTISSAGE STANDARD CLIP MCON 1.2 LL *STANDARD CRIMP MCON 1.2 LL RECEPTACLE* | | |
|---|---|---|
| 1452659-1 | ETAME / *TINNED* | 1.0mm² |
| 1452656-1 | ETAME / *TINNED* | 0.5 - 0.75mm² |
| 1452653-1 | ETAME / *TINNED* | 0.35mm² |
| **SERTISSAGE STANDARD CLIP MCON 2.8 *STANDARD CRIMP MCON 2.8 RECEPTACLE*** | | |
| 1718475-1 | ETAME / *TINNED* | 3.0 - 4.0mm² |
| 1719840-1 | ETAME / *TINNED* | 1.5 - 2.5mm² |
| 1719838-1 | ETAME / *TINNED* | 0.75 - 1.0mm² |
| 1563719-1 | ETAME / *TINNED* | 0.5mm² |
| REFERENCE TE *TE PN* | REVETEMENT *COATING* | SECTIONS FILS *WIRE SIZE RANGE* |

D-D

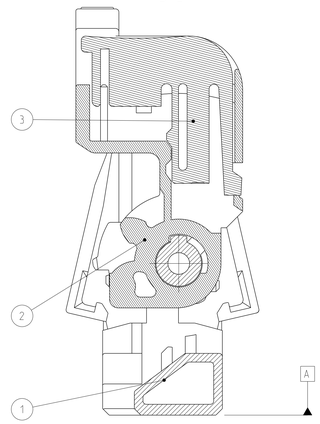

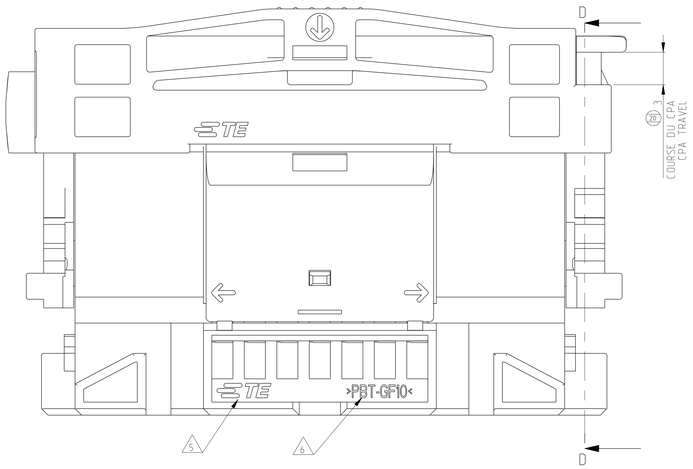


CODAGE:
*KEYING*
TOLERANCES POUR DETROMPAGES: ±0.15
*KEYING TOLERANCES: ±0.15*

| REF TE *TE PN* | INDICE REVISION PRODUIT *PRODUCT REVISION LOGO* | COULEUR *COLOR* |
|---|---|---|
| 1801735-1 | A | NOIR *BLACK* |
| 1801735-2 | A | GRIS *GREY* |
| 1801735-3 | A | BLEU *BLUE* |
| 1801735-4 | A | MARRON *BROWN* |
| 1801735-5 | A | VIOLET *POURPLE* |

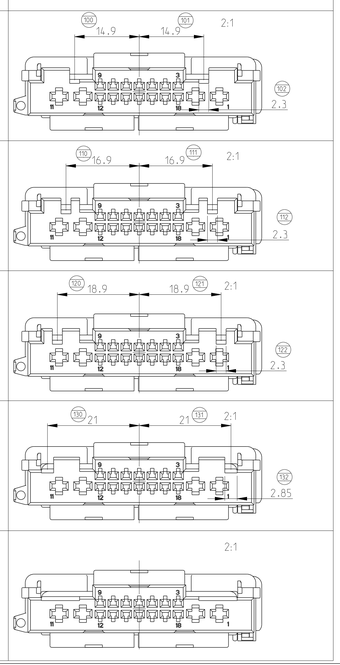


| VERROU SECONDAIRE / *SECONDARY LOCK* | |
|---|---|
| POSITION DE LIVRAISON *DELIVERY POSITION* | DV VERROUILLE *SL LOCKED* |
| B-B 1:1 (17.8) | B-B 1:1 (11) |
| **CPA / *CPA*** | |
| POSITION DE LIVRAISON *DELIVERY POSITION* | VERROUILLE - POSITION APRES ACCOUPLEMENT *LOCKED - POSITION AFTER MATING* |
| D-D 1:1 (15) | D-D 1:1 (32) |

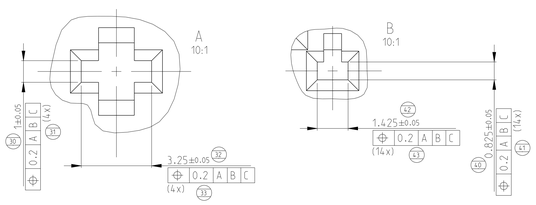


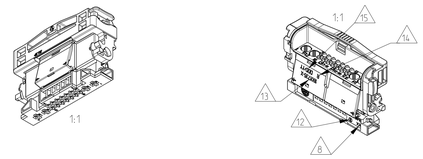


| | | | |
|---|---|---|---|
| ORANGE *ORANGE* | PBT-GF20 | CPA *CPA* | 3 |
| NATUREL *NATURAL* | PBT GF20 | LEVIER *LEVER* | 2 |
| VOIR TABLEAU DES REFERENCES *SEE TABLE OF PART NUMBER* | PBT-GF10 | BOITIER PORTE-CLIPS *RECEPTACLE HOUSING* | 1 |
| **COULEUR *COLOR*** | **MATIERE *MATERIAL*** | **DESCRIPTION *TITLE*** | **REP. *ITEM*** |

THIS DRAWING IS A CONTROLLED DOCUMENT.

DIMENSIONS: mm

TOLERANCES UNLESS OTHERWISE SPECIFIED: 0 PLC ±- ; 1 PLC ±0.5 ; 2 PLC ±0.2 ; 3 PLC ±0.1 ; 4 PLC ±- ; ANGLES ±0° ; FINISH SEE TABLE

MATERIAL SEE TABLE

| | | |
|---|---|---|
| DWN | C.VOLANTIN | 28JUN2013 |
| CHK | X. ROUILLAR | 28JUN2013 |
| APVD | J. DAHER | 28JUN2013 |

PRODUCT SPEC 108-15431
APPLICATION SPEC 408-15014
WEIGHT 15g

TE Connectivity

NAME: PORTE-CLIPS 18 VOIES HYB
18 WAYS HYBRID RECEPTACLE HOUSING
NON ETANCHE / UNSEALED

| SIZE | CAGE CODE | DRAWING NO | RESTRICTED TO |
|---|---|---|---|
| A0 | 00779 | C-1801735 | |

CUSTOMER DRAWING — SCALE 5:1 — SHEET 1 OF 1 — REV A

4806 (3/11)