THIS DRAWING IS UNPUBLISHED. RELEASED FOR PUBLICATION , . – –
© COPYRIGHT – By Tyco Electronics Japan G.K. ALL RIGHTS RESERVED.

REVISIONS

P	LTR	DESCRIPTION	DATE	DWN	APVD
	H	REVISED PER ECR–19–000804	17JAN2019	A.W	R.B

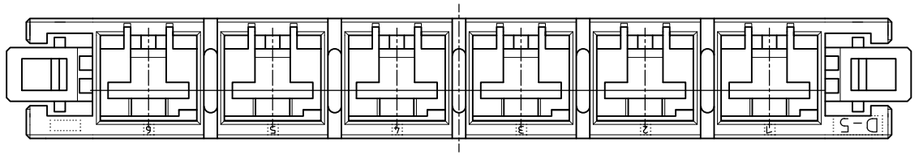

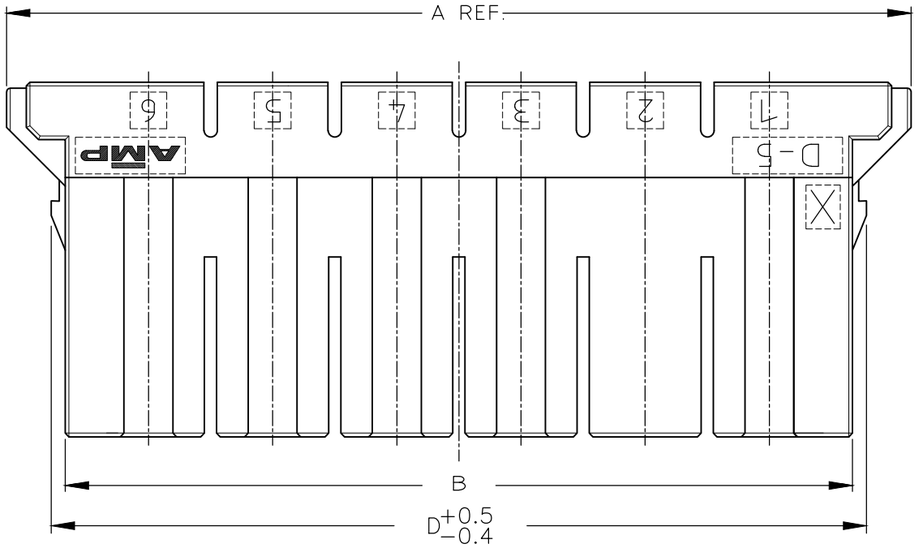

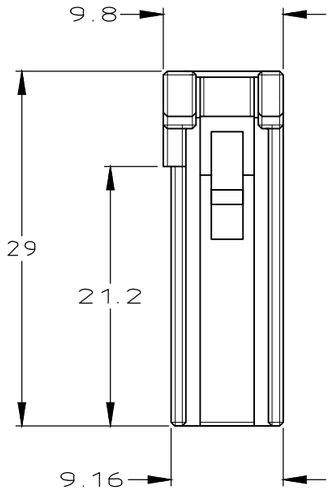

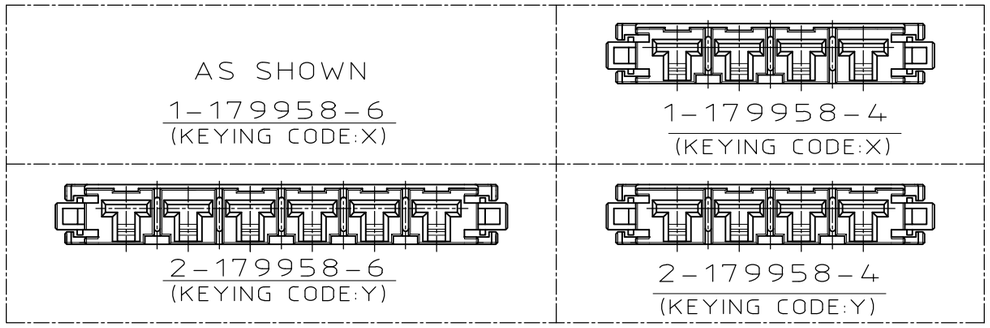

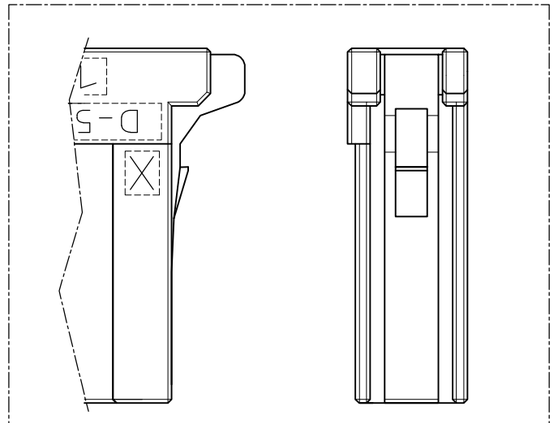

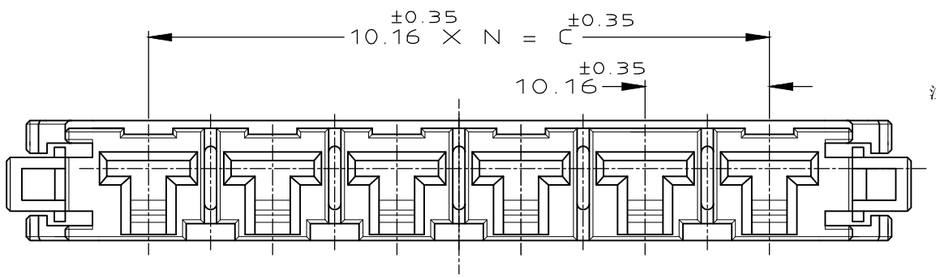

1–179958–6
(KEYING CODE:X)

注 記

1. 材料 ハウジング ガラス入り熱可塑性
ポリエステル樹脂94V–0),色 黒
2. ~~ハウジング全面にテフロン塗装のこと~~
3. 製品規格 ：108–5453

NOTES

1. MATERIAL:HOUSING:GLASS FILED THERMO PLASTIC
,POLYESTER(94V–0),COLOR:BLACK
2. ~~TO COAT ALL SURFACE OF HOUSING WITH TEFLON~~
3. PRODUCT SPEC :108–5453

								BLACK	2–179958–6
		66.70	50.8	64.4	73.02	5	6	BLACK	1–179958–6
OBSOLETE	2								~~5–179958–4~~
								BLACK	2–179958–4
		46.38	30.48	44.08	53.68	3	4	BLACK	1–179958–4
OBSOLETE	2								~~5–179958–3~~
OBSOLETE								NATURAL	~~9–179958–3~~
								BLACK	2–179958–3
		36.22	20.32	33.92	45.92	2	3	BLACK	1–179958–3
								BLACK	2–179958–2
		26.06	10.16	23.76	35.76	1	2	BLACK	1–179958–2
FINISH		D	C	B	A	N	POS	COLOR	P/N

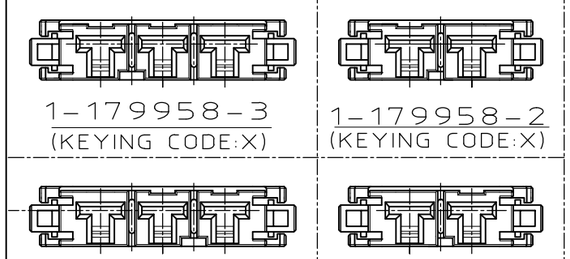

THIS DRAWING IS A CONTROLLED DOCUMENT.

DIMENSIONS: mm

TOLERANCES UNLESS OTHERWISE SPECIFIED:
0 PLC ± 10 ±0.2
1 PLC ± 30 >10 ±0.25
2 PLC ± 100 >30 ±0.3
3 PLC ±
4 PLC ±
ANGLES ±3°

MATERIAL 1

FINISH

DWN Y.ISHIKAWA 22MAR1995
CHK S.MANABE 23MAR1995
APVD S.MABABE 23MAR1995
PRODUCT SPEC
APPLICATION SPEC
WEIGHT 0

TE Connectivity

NAME
SINGLE ROW REC HSG
DYNAMIC D–5200
–

SIZE	CAGE CODE	DRAWING NO	RESTRICTED TO
A3	00779	C–179958	—

CUSTOMER DRAWING | SCALE 2:1 | SHEET 1 OF 1 | REV H1