THIS DRAWING IS UNPUBLISHED. RELEASED FOR PUBLICATION - ,- .
© COPYRIGHT - By - ALL RIGHTS RESERVED.

REVISIONS

P	LTR	DESCRIPTION	DATE	DWN	APVD
	T	REVISED PER ECO-17-002584	11APR2017	BDA	MM
	U	REVISED PER ECO-20-001323	17JUN2020	SM	JO

1. .00038[.000015] GOLD IN THE CONTACT AREA, .00254[.000100] MATTE TIN-LEAD ON REMAINDER OF CONTACT, ALL OVER .00127[.000050] NICKEL.
2. POINT OF MEASUREMENT FOR PLATING THICKNESS.
3. THE NOTED DIMENSIONS APPLY AT THE INTERSECTION OF THE POST AND THE HOUSING.
4. ON ASSEMBLIES WITH FOUR OR MORE POSITIONS, TWO POLARIZATION SLOTS. ON ASSEMBLIES WITH TWO OR THREE POSITIONS, ONE POLARIZATION SLOT.
5. SELECT POST TAILS FORMED TO PROVIDE CONNECTOR HOLD DOWN UNTIL SOLDERED. CONFIGURATION ACCEPTS 0.69[.027]-2.03[.080] THICK PRINTED CIRCUIT BOARD. (SEE DETAIL Z).
6. OBSOLETE PARTS: OBSOLETE CIS STREAMLINING PER D.RENAUD/D.SINISI
7. 0.25 [.010] RECESS PERMISSIBLE IN THIS AREA FOR MOLD SHUT OFF

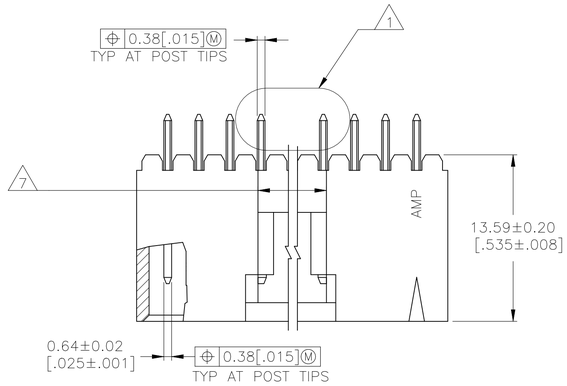

DETAIL Z
POST DETAIL TYP
2 POST MINIMUM

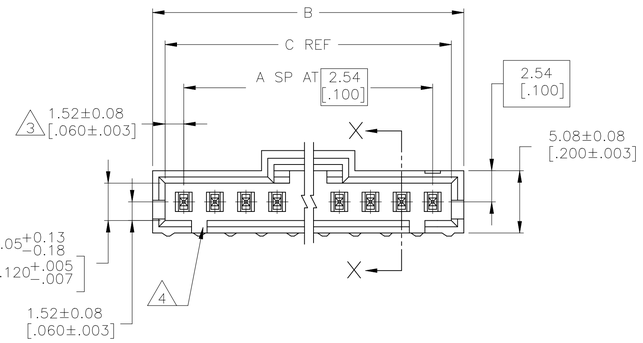

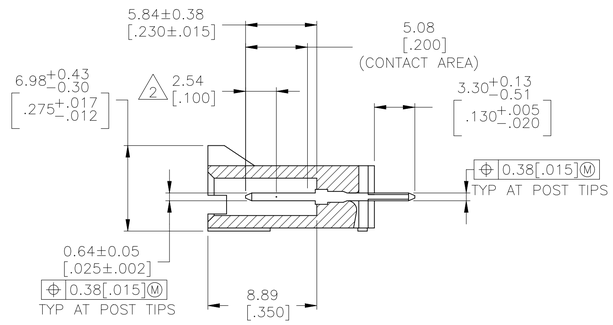

SECTION X-X

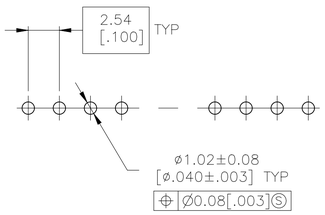

RECOMMENDED HOLE LAYOUT

	C	B	A	NO OF POSN	PART NO.
	64.01 [2.520]	65.91 [2.595]	24	25	2-103670-4
	61.47 [2.420]	63.37 [2.495]	23	24	2-103670-3
6 OBSOLETE	~~58.93 [2.320]~~	~~60.83 [2.395]~~	~~22~~	~~23~~	~~2-103670-2~~
	56.39 [2.220]	58.29 [2.295]	21	22	2-103670-1
6 SUPERCEDED BY 7-104909-0	~~53.85 [2.120]~~	~~55.75 [2.195]~~	~~20~~	~~21~~	~~2-103670-0~~
	51.31 [2.020]	53.21 [2.095]	19	20	1-103670-9
6 SUPERCEDED BY 6-104909-8	~~48.77 [1.920]~~	~~50.67 [1.995]~~	~~18~~	~~19~~	~~1-103670-8~~
	46.23 [1.820]	48.13 [1.895]	17	18	1-103670-7
	43.69 [1.720]	45.59 [1.795]	16	17	1-103670-6
	41.15 [1.620]	43.05 [1.695]	15	16	1-103670-5
	38.61 [1.520]	40.51 [1.595]	14	15	1-103670-4
	36.07 [1.420]	37.97 [1.495]	13	14	1-103670-3
	33.53 [1.320]	35.43 [1.395]	12	13	1-103670-2
	30.99 [1.220]	32.89 [1.295]	11	12	1-103670-1
	28.45 [1.120]	30.35 [1.195]	10	11	1-103670-0
	25.91 [1.020]	27.81 [1.095]	9	10	103670-9
	23.37 [.920]	25.27 [.995]	8	9	103670-8
	20.83 [.820]	22.73 [.895]	7	8	103670-7
	18.29 [.720]	20.19 [.795]	6	7	103670-6
	15.75 [.620]	17.65 [.695]	5	6	103670-5
	13.21 [.520]	15.11 [.595]	4	5	103670-4
	10.67 [.420]	12.57 [.495]	3	4	103670-3
	8.13 [.320]	10.03 [.395]	2	3	103670-2
	5.59 [.220]	7.49 [.295]	1	2	103670-1

THIS DRAWING IS A CONTROLLED DOCUMENT.

DIMENSIONS: mm [INCHES]

TOLERANCES UNLESS OTHERWISE SPECIFIED:
0 PLC ± -
1 PLC ± -
2 PLC ± 0.13[.005]
3 PLC ± -
4 PLC ± -
ANGLES ± -

MATERIAL
LCP, COLOR - BLACK
CONTACTS: BRASS

FINISH 1

DWN S. SHUEY 3-5-91
CHK M.RIDER 2-14-92
APVD M.RIDER 2-14-92
PRODUCT SPEC 108-25034
APPLICATION SPEC 114-25026
WEIGHT -

TE Connectivity

NAME HDR ASSY, VERT, SINGLE ROW 2.54[.100] CL, 0.64[.025] SQ POST, WITH PLZN & RETENTIVE POSTS, AMPMODU MTE

SIZE A1 | CAGE CODE 00779 | DRAWING NO C-103670 | RESTRICTED TO -

CUSTOMER DRAWING | SCALE 4:1 | SHEET 1 OF 1 | REV U

4805 (1/15)