THIS DRAWING IS UNPUBLISHED. RELEASED FOR PUBLICATION 2012
© COPYRIGHT 2012 BY - ALL RIGHTS RESERVED.

LOC	DIST
A1	-

REVISIONS

P	LTR	DESCRIPTION	DATE	DWN	APVD
	G3	Dimensions new attracted	22NOV2012	Ho.	Krauss
	G4	REVISED PER ECR-23-188581	03MAR2024	RK	DJ

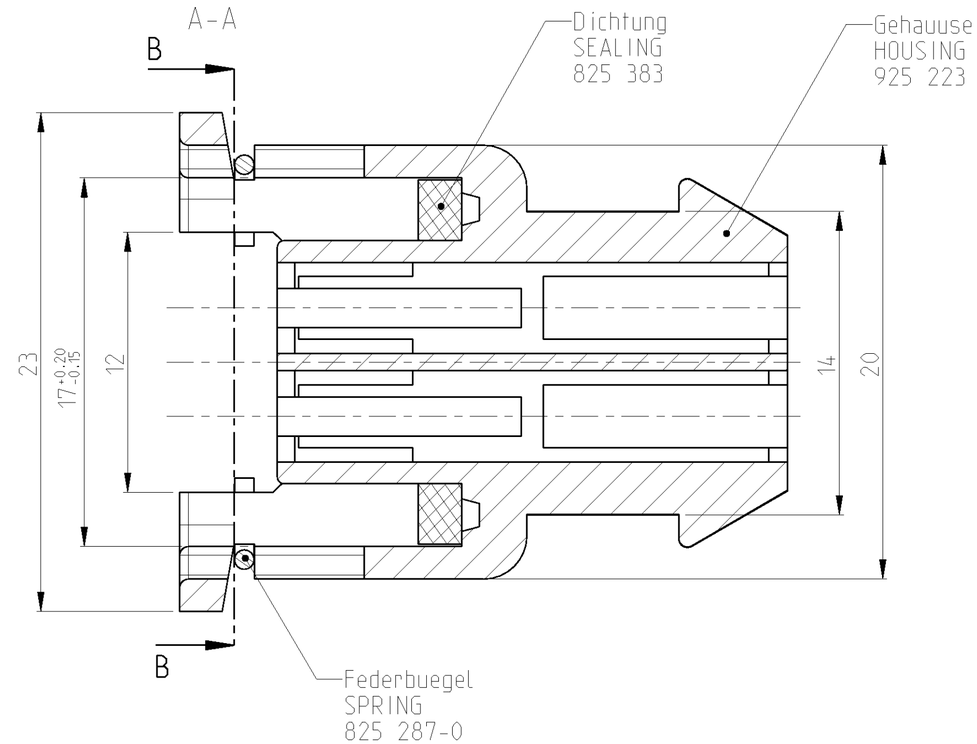

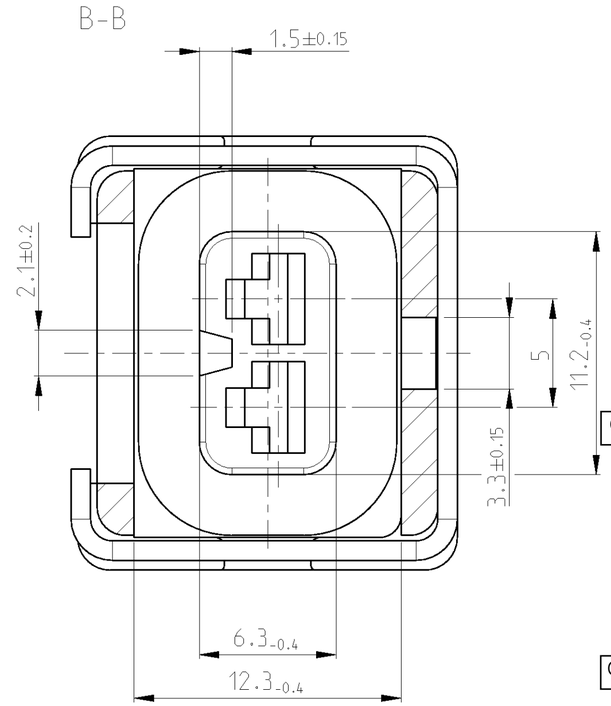

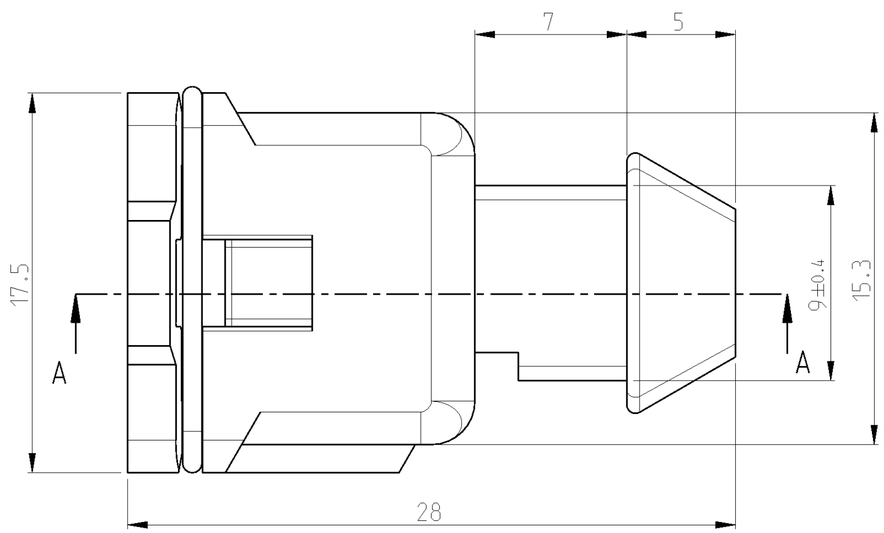

	ASSY NO.	COLOR HSG.	MATERIAL HSG.	SEALING NO.
	3-825 414-6	BROWN	PA 6.6 GV 30	825 383-4
	3-825 414-5	BLACK	PA 6.6 GV 30	825 383-4
OBSOLETE	~~3-825 414-3~~	~~BLUE~~	~~PA 6.6 GV 30~~	~~825 383-4~~
	3-825 414-2	GREEN	PA 6.6 GV 30	825 383-4
	3-825 414-1	GREY	PA 6.6 GV 30	825 383-4
	3-825 414-0	CLEAR	PA 6.6 GV 30	825 383-4
	2-825 414-6	BROWN	PA 6.6 GV 13	825 383-4
	2-825 414-5	BLACK	PA 6.6 GV 13	825 383-4
OBSOLETE	~~2-825 414-3~~	~~BLUE~~	~~PA 6.6 GV 13~~	~~825 383-4~~
	2-825 414-2	GREEN	PA 6.6 GV 13	825 383-4
	2-825 414-1	GREY	PA 6.6 GV 13	825 383-4
	2-825 414-0	CLEAR	PA 6.6 GV 13	825 383-4
	1-825 414-6	BROWN	PA 6.6 GV 30	825 383-1
	1-825 414-5	BLACK	PA 6.6 GV 30	825 383-1
	1-825 414-3	BLUE	PA 6.6 GV 30	825 383-1
	1-825 414-2	GREEN	PA 6.6 GV 30	825 383-1
	1-825 414-1	GREY	PA 6.6 GV 30	825 383-1
	1-825 414-0	CLEAR	PA 6.6 GV 30	825 383-1
	825 414-6	BROWN	PA 6.6 GV 13	825 383-1
	825 414-5	BLACK	PA 6.6 GV 13	825 383-1
	825 414-3	BLUE	PA 6.6 GV 13	825 383-1
	825 414-2	GREEN	PA 6.6 GV 13	825 383-1
	825 414-1	GREY	PA 6.6 GV 13	825 383-1
	825 414-0	CLEAR	PA 6.6 GV 13	825 383-1

THIS DRAWING IS A CONTROLLED DOCUMENT.

DIMENSIONS: mm

TOLERANCES UNLESS OTHERWISE SPECIFIED:
0 PLC ±
1 PLC ±±
2 PLC ±±±
3 PLC ±±±±
4 PLC ±±±±±
ANGLES ±1°

MATERIAL: SEE TABLE
FINISH: -

DWN Haas, C. 18JUL2006
CHK Stredak, F. 23AUG2006
APVD Bleicher, M. 25AUG2006
PRODUCT SPEC -
APPLICATION SPEC -
WEIGHT -

TE Connectivity

NAME: ASSEMBLY FOR 2POS. FEMALE HSG. FOR JUNIOR-TIMER CONTACT 2 pol. Buchsengeh. fuer JT Kontakt

SIZE	CAGE CODE	DRAWING NO	RESTRICTED TO
A2	00779	C-825414_C	-

Customer Drawing

SCALE 5:1 SHEET 1 OF 1 REV G4

1471-9 (3/11)
Pro/ENGINEER DRAWING