Crimping of 0.64III Receptacle Contact

The performance of applicable product is guaranteed only when processed by proper application tooling and condition described in this specification and/or TE recognized ones. No product is guaranteed when processed with the other tool or condition.

1. Scope

This specification covers the requirements for crimping of 0.64III Receptacle Contact.

2. Applicable Contacts

TE Part Numbers		NAME	Finish	Applicable Wires
Strip Form	Loose Piece			
1674936-1	1827805-1	0.64III RECEPTACLE CONTACT (S)	Pre-Tin	CAVS/CAVUS/CHFUS 0.22
1674936-2	1827805-2		Selective Gold	
1674311-1	1827804-1	0.64III RECEPTACLE CONTACT	Pre-Tin	AVSS/AVSSH/AESSX 0.3-0.5 CAVUS/ CAVS 0.3-0.5 CHFUS 0.35 AVSS 0.5f AVX 0.3f
1674311-2	1827804-2		Selective Gold	

3. Nomenclature

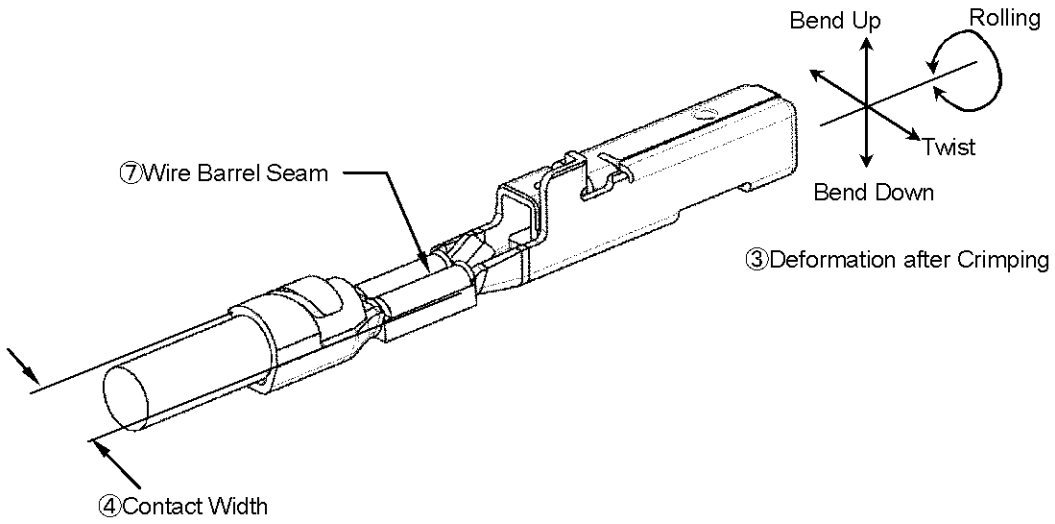

Fig.1 (To be continued)

タイコ エレクトロニクス アンプ株式会社（〒213-8535 川崎市高津区久本 3-5-8）
Tyco Electronics AMP K.K. (3-5-8 Hisamoto Takatsu-ku Kawasaki, 213-8535)
この文書の改版の確認は本社、支店へお問い合わせください。 This document is subject to change. Call local AMP for the latest revision.
© Copyright 2005 by Tyco Electronics AMP K.K. All rights reserved.
*： 商標 Trademark

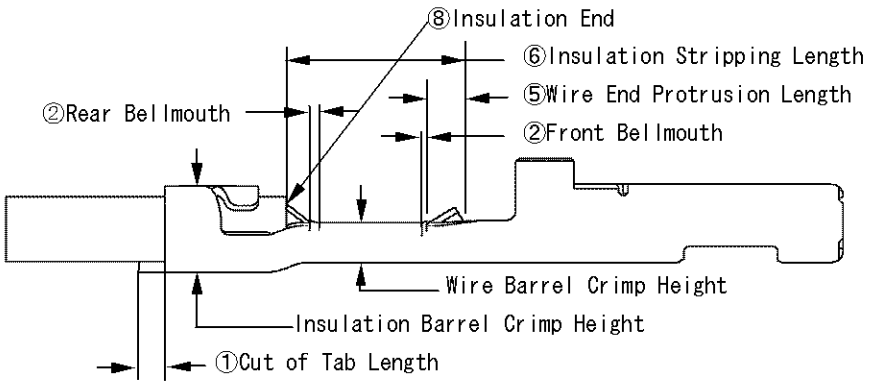

Fig.1 (End)

4. Crimping Condition

4.1 Applicator Crimp

Check Items				Remarks
1	Cut-off Tab Length		0.1-0.5mm	Fig.1-①
2	Bellmouth	Front	0.2mm Max.	Fig.1-②
		Rear	0.1-0.5mm	
3	Deformation after Crimping	Bend	-1°, +2°Max.	Fig.1-③
		Twist	±4°Max.	
		Rolling	±10°Max.	
4	Contact Width after Crimping		1.7mm Max.	Fig.1-④
5	Wire End Protrusion Length		0-1mm	Fig.1-⑤
6	Insulation Stripping Length		3.0-3.5mm (Before Crimping)	Fig.1-⑥
7	Wire Barrel Seam		Seam must be closed (No strand looses out of the seam)	Fig.1-⑦
8	Insulation End		Insulation End must be between Wire Barrel and Insulation Barrel	Fig.1-⑧

4.2 Hand Tool Crimp

Check Items				Remarks
1	Cut-off Tab Length		0.1-0.5mm	Fig.1-①
2	Bellmouth	Front	0.2mm Max.	Fig.1-②
		Rear	0.1-0.5mm	
3	Deformation after Crimping	Bend	-2.5°, +3.5°Max.	Fig.1-③
		Twist	±4°Max.	
		Rolling	±10°Max.	
4	Contact Width after Crimping(1)		1.7mm Max.	Fig.1-④
5	Wire End Protrusion Length		0-1mm	Fig.1-⑤
6	Insulation Stripping Length		3.0-3.5mm (Before Crimping)	Fig.1-⑥
7	Wire Barrel Seam		Seam must be closed (No strand looses out of the seam)	Fig.1-⑦
8	Insulation End		Insulation End must be between Wire Barrel and Insulation Barrel	Fig.1-⑧

NOTE (1); There is possibility of the dimension is different caused of the ability of operator. Make sure the contact must be inserted smoothly into the Plug housing.

5. Crimp Data

5.1 Applicator Crimp

Contact Part Number (Strip Form)	Wire Size (Nominal)	Applicator Part Number	Wire Barrel Crimp			Insulation Barrel Crimp			Crimp Tensile Strength (N)
			Width(2) (mm)	Height(1) (mm)	Disk Ltr. (Ref.)	Width(2) (mm)	Height (mm)	Disk Ltr. (Ref.)	
1674936-1 1674936-2	0.22	1729145-2	1.16 "F"	0.73	A	1.4 "O"	1.35 ±0.1	5	39 Min. (3)
1674311-1 1674311-2	0.3 0.3 f 0.35	1596731-2	1.4 "F"	0.76	B	1.4 "O"	See Para.6	See Para.6	55 Min. (3)
	0.5 0.5 f			0.86	A				90 Min.

NOTE (1);Wire Barrel Crimp Height to be within ±0.05mm.
(2);Crimp Width dimensions are not the product width after crimping, but given by the width of crimper slot for reference.
(3);Crimp Tensile Strength includes the wire grip of insulation barrel.

5.2 Hand Tool Crimp

Contact Part Number (Loose Piece)	Wire Size (Nominal)	Hand Tool Part Number	Insulation Diameter (mm)	Crimp Symbol		Wire Barrel Crimp Height(1) (mm)	Crimp Tensile Strength (N)
				Wire	Insulation		
1827805-1 1827805-2	0.22	1762338-1	0.95-1.35	24	INS	0.66-0.80	30Min. (2)
1827804-1 1827804-2	0.3 0.3 f 0.35	1762337-1	1.1-1.7	22-20	INS	0.72-0.86	45Min. (2)
	0.5 0.5 f						65Min.

NOTE (1);This tool is for maintenance. The different dimension may be caused according to the ability of operator. Except for the purpose above, you should use the applicator.
(2);Crimp Tensile Strength includes the wire grip of insulation barrel.

6. Crimp Data of Insulation Barrel

Contact Part Number		Wire Size (Nominal)	AVSSH/AVSS		CAVUS		CAVS		AESSX		AVX		CHFUS	
Strip Form	Loose Piece		Height (mm)	Disk Ltr. (Ref.)	Height (mm)	Disk Ltr. (Ref.)	Height (mm)	Disk Ltr. (Ref.)	Height (mm)	Disk Ltr. (Ref.)	Height (mm)	Disk Ltr. (Ref.)	Height (mm)	Disk Ltr. (Ref.)
1674311-1 1674311-2	1827804-1 1827804-2	0.3 0.3f	1.85 ±0.1	5	1.5 ±0.1	5	1.85 ±0.1	5	1.85 ±0.1	5	1.70 ±0.1	6	-	-
		0.35	-	-	-	-	-	-	-	-	-	-	1.5 ±0.1	
		0.5 0.5f	1.85 ±0.1	5	1.7 ±0.1	5	1.85 ±0.1	5	1.85 ±0.1	5	-	-	-	-

7. Applicable Wire Data

1) JASO Wire

Wire Size (Nominal)	Number /Diameter (mm) of Conductor	Calculated Cross sectional Area (mm^2)	Insulation Diameter (mm)									
			AVSSH /AVSS		CAVUS		CAVS		AESSX		AVX	
			STD.	Max.	STD.	Max.	STD.	Max.	STD.	Max.	STD.	Max.
0.22	7/ circular compression	0.2199	-	-	0.95	1.05	1.25	1.35	-	-	-	-
0.3	7/0.26	0.3716	1.4	1.5	1.1	1.2	1.4	1.5	-	-	-	-
0.3f	19/0.16	0.3821	1.4	1.5	-	-	1.4	1.5	1.4	1.5	-	-
	12/0.18	0.3054	-	-	-	-	-	-	-	-	1.5	1.6
0.5	7/0.32	0.5629	1.6	1.7	1.3	1.4	1.6	1.7	-	-	-	-
0.5f	19/0.19	0.5387	1.6	1.7	-	-	-	-	1.6	1.7	-	-

2)ISO Wire

Wire Size (Nominal)	Number /Diameter (mm) of Conductor	Calculated Cross sectional Area (mm^2)	Perimeter of conductor (mm) (roughly)	Insulation Diameter (mm)			
				CHFUS		HFSS	
				STD.	Max.	STD.	Max.
0.22	7/ circular compression	0.2199	0.55	0.95	1.05	-	-
0.35	7/ circular compression	0.3436	0.7	1.1	1.2	-	-
0.35f	19/0.155	0.3585	0.8	-	-	1.3	1.4
0.5	7/ circular compression	0.4948	0.85	1.25	1.4	-	-
0.5f	19/0.185	0.5107	0.95	-	-	1.5	1.7