DRAWING MADE IN THIRD ANGLE PROJECTION

680291 ⇔ 680291

/home/ampt5242/edmmod

PART NUMBER	REV	FIRST USED
680291 -1	B	565435-5
680291 -2	B	354500-1

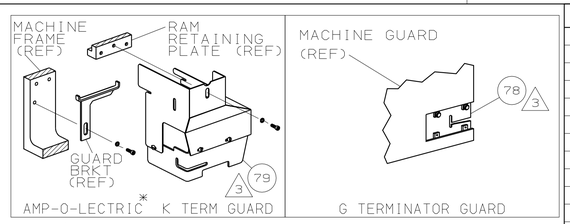

TERMINAL NAME: AMPLIVAR SPLICE

280002
280003

CRIMPING DATA

PAD LTR	CRIMP HEIGHT	WIRE SIZE, CMA
A	.074 ±.002 [1.88 ±0.05mm]	5000-4100 △5
B	.069 ±.002 [1.75 ±0.05mm]	4100-3300 △6
C	.064 ±.002 [1.63 ±0.05mm]	3300-2400 △7
D	.059 ±.002 [1.50 ±0.05mm]	2400-1600 △8

CRIMP	SIZE	TYPE	RANGE
WIRE	.110 [2.79mm]	F	1500-5000
INSUL	-	-	-

WIRE STRIP LENGTH	TERM APPL SPEC	FEED	APPL INSTRUCTION	SET UP GAGE	LAYOUT
-	114-2002	.315	408-8039	458638-1	-

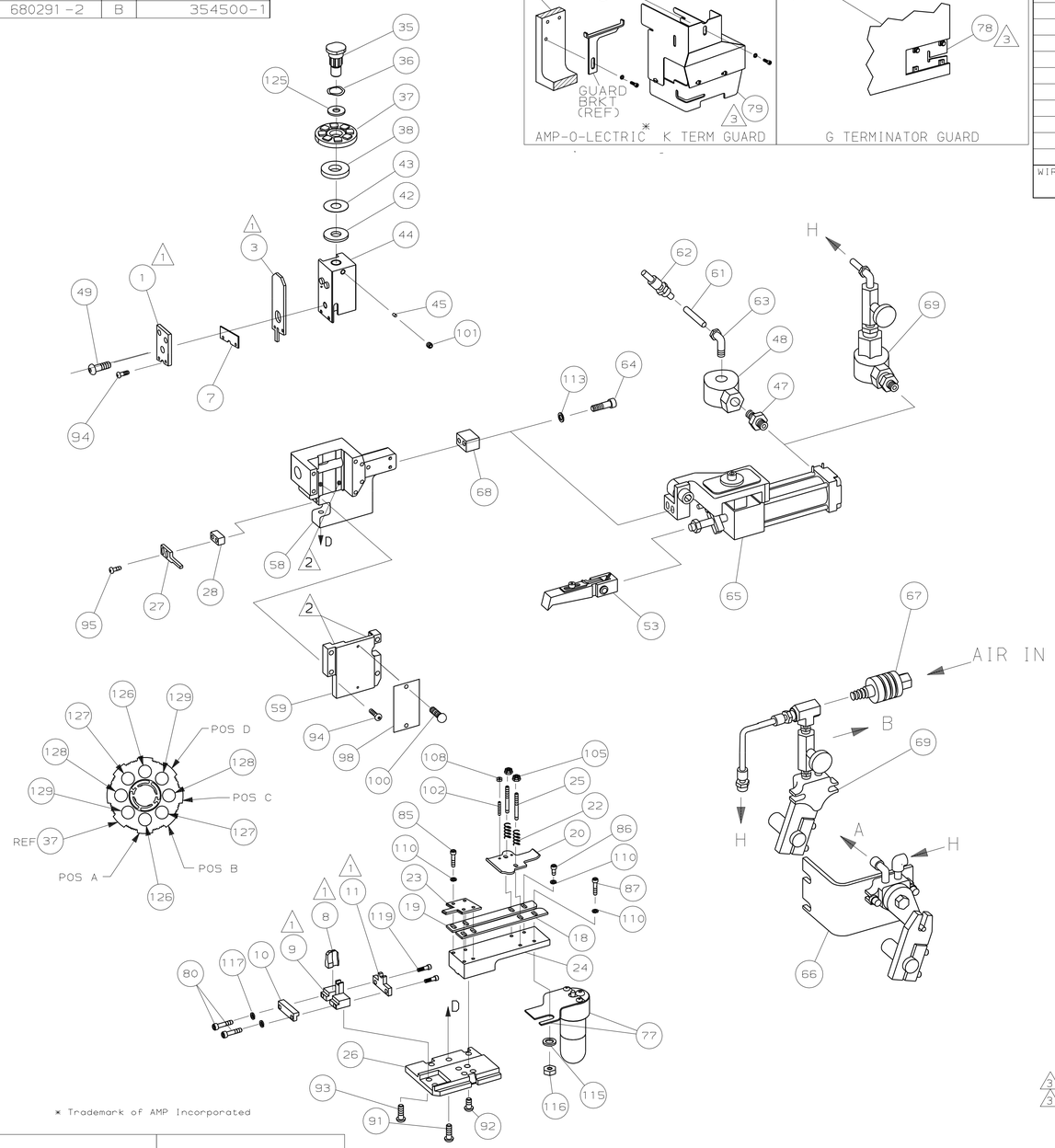

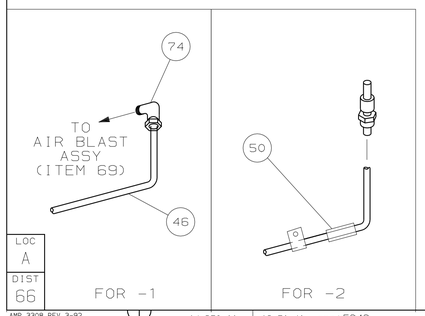

△1 RECOMMENDED SPARE PARTS.
△2 GREASE LIGHTLY.
△3 GUARD MUST BE IN PLACE WHEN OPERATING APPLICATOR IN A BENCH MACHINE.
△4 SEE DRAWING FOR COMPONENTS
△5 USE 14 MAG WIRE FOR SET-UP ONLY.
△6 USE 15 MAG WIRE FOR SET-UP ONLY.
△7 USE 16 MAG WIRE FOR SET-UP ONLY.
△8 USE 17 MAG WIRE FOR SET-UP ONLY.

-2	-1	U/M	DWG SIZE	PART NO	DESCRIPTION	ITEM NO
				REVISION OF EACH ASSY NO (WHEN BLANK, USE DWG REVISION)		
QTY REQD PER ASSY				PARTS LIST		
	2	2	-	C	1-354779-4	PIN, WIRE DISC (.3060)D	129
	2	2	-	C	9-354778-9	PIN, WIRE DISC (.2990)C	128
	2	2	-	C	9-354778-3	PIN, WIRE DISC (.2960)B	127
	2	2	-	C	8-354778-1	PIN, WIRE DISC (.2900)A	126
	1	1	-	A	986950-1	WASHER, FLAT PRECISION	125
							124
							123
							122
							121
							120
	2	2	-	A	1-21002-6	SCR,BHC (6-32X .25)PLATE,STR GUI	119
							118
	4	4	-	A	21024-3	WASHER,LOCK(NO.6)SHEAR PL	117
	1	1	-	A	21018-6	NUT, HEX (8-32)LUBE	116
	1	1	-	A	21055-6	WASHER,FLAT #8 LUBE	115
							114
	2	2	-	A	21024-5	WASHER,LOCK(#10)AIR ASSY	113
							112
	2	2	-	A	4-21000-2	SCR,SHC(10-32X 2.00)AIR FEED BRKT	111
	3	3	-	A	21024-4	WASHER,LOCK(NO.8)SHEAR BL	110
							109
	2	2	-	A	21018-4	NUT,HEX(4-40)DRAG	108
							107
							106
	2	2	-	A	21022-2	NUT,HEX SL(8-32)DRAG STUD	105
							104
							103
	2	2	-	A	4-21078-8	SKT SKT SET (4-40x.75)DRAG	102
	1	1	-	A	21009-2	SCR,SKT SET(1/4-20x.25)RAM	101
	2	2	-	A	21017-2	SCR,DRIVE(#2x.19)ID PLATE	100
							99
	1	1	-	B	464249-1	PLATE, IDENTIFICATION	98
							97
							96
	2	2	-	A	8-21002-9	SCR,BHC(8-32X1.00)STRIPPER	95
	6	6	-	A	2-21002-9	SCR,BHC(10-32x.75)CAP	94
	2	2	-	A	2-21002-6	SCR,BHC(10-32x.38)ANVIL BODY	93
	4	4	-	A	3-21002-4	SCR,BHC(1/4-20x.62)ST GD PL	92
	3	3	-	A	2-22733-8	SCR,BHC(1/4-20x.62)HSG	91
							90
							89
							88
	1	1	-	A	2-21000-9	SCR,SHC(8-32X.75)LUBE	87
	1	1	-	A	2-21000-6	SCR,SHC(8-32x.38)STRIP GUIDE	86
	4	4	-	A	2-21002-2	SCR,BHC(8-32x.50)R STRIP GUIDE	85
							84
							83
							82
							81
	2	2	-	A	1-21000-9	SCR,SKT CAP(6-32x.38)SH PL	80
△3	-	1	-	A	460980-2	GUARD ASSY	79
△3	REF	-	-	A	679532-1	INSERT, GUARD	78
	1	1	-	C	1-465184-7	LUBRICATOR ASSY	77
							76
							75
	-	1	-	A	22317-3	ELBOW, COPPER TUBE	74
							73
							72
							71

-1	BENCH MODEL K	AIRFEED
-2	BENCH MODEL G	AIRFEED

-2	-1	U/M	DWG SIZE	PART NO	DESCRIPTION	ITEM NO
				REVISION OF EACH ASSY NO (WHEN BLANK, USE DWG REVISION)		
QTY REQD PER ASSY				PARTS LIST		
						70
△4	-	1	-	C	455350-1	AIR BLAST ASSY	69
	1	1	-	A	461690-1	SPACER, AIR FEED	68
	-	1	-	A	24042-2	VALVE, SHUT OFF	67
△4	-	1	-	C	692655-1	AIR FEED VALVE ASSY	66
△4	1	1	-	B	460277-1	AIR FEED ASSY (1 INCH)	65
	2	2	-	A	4-21000-3	SCR,SHC(10-32x2.00)AIR ASSY	64
	1	-	-	A	983427-6	ELBOW, SWIVEL 1/8 NPT - 1/4 T	63
	1	1	-	A	23238-1	QUICK DISCONNECT	62
	12.00	-	IN	A	27319-4	TUBING, POLY-FLO Ø.25	61
							60
	1	1	-	C	462926-1	CAP, RAM	59
	1	1	-	D	453736-1	HOUSING	58
							57
							56
							55
							54
△4	1	1	-	B	460680-7	FEED FINGER ASSY	53
							52
							51
	1	-	-	A	318848-1	AIR BLAST ASSEMBLY	50
	1	1	-	A	7-21002-9	BOLT, CRIMPER (5/16x1.00)	49
	1	-	-	A	22374-7	VALVE, QUICK EXHAUST	48
	1	-	-	A	22304-1	NIPPLE,HEX 1/8 NPT	47
	-	1	-	A	689446-2	TUBE, AIR BLAST	46
	1	1	-	A	690191-1	PLUG, NYLON	45
	1	1	-	C	459586-1	RAM	44
	1	1	-	A	690125-1	WASHER, LAMINATED	43
	1	1	-	A	690124-4	WASHER, RAM	42
	1	1	-	A	690223-2	SPACER,DISC	41
							40
							39
	1	1	-	A	690223-2	SPACER, INSULATION DISC	38
	1	1	-	D	354777-1	WIRE DISC, PLASTIC	37
	1	1	-	A	22480-5	WASHER, SPRING	36
	1	1	-	B	690212-1	POST, RAM	35
							34
							33
							32
							31
							30
							29
	1	1	-	B	3-690451-9	SPACER, STRIPPER	28
	1	1	-	A	460276-1	STRIPPER	27
	1	1	-	D	459584-1	PLATE, BASE	26
	2	2	-	A	22354-8	DRAG, STUD	25
	1	1	-	B	462931-1	PLATE, STRIP GUIDE	24
	1	1	-	C	462932-1	PLATE, STRIP HOLD DOWN	23
	2	2	-	A	4-22281-1	SPRING, DRAG	22
							21
	1	1	-	A	462925-1	DRAG, STOCK	20
	1	1	-	B	462929-3	GUIDE, STRIP (REAR)	19
	1	1	-	C	462930-3	GUIDE, STRIP (FRONT)	18
							17
							16
							15
							14
							13
							12
△1	1	1	-	B	459684-1	PLATE,GUIDE RETAINER	11
	1	1	-	B	459580-1	PLATE,ANVIL RETAINER	10
△1	1	1	-	B	459583-1	BODY, ANVIL	9
△1	1	1	-	D	459582-4	ANVIL	8
△1	1	1	-	B	459581-1	BLADE, SLUG	7
							6
							5
							4
△1	1	1	-	C	459587-1	CRIMPER GUIDE	3
							2
△1	1	1	-	C	459585-1	CRIMPER, WIRE	1

P	F	LTR	REVISION RECORD	APP	DATE
		B	0150-0861-00	GB	12/00
		A	REVISED	CE	5/96

DIMENSIONS IN INCHES.
DO NOT SCALE PRINT.
TOLERANCES UNLESS OTHERWISE SPECIFIED:
2 PLC DEC ±.25
3 PLC DEC ±-
4 PLC DEC ±-
ANGLES ± -
SURF TEXTURE: √
REMOVE BURRS, BREAK SHARP EDGES R.015 MAX

MATL	HT TR	FIN
-	-	-
-	-	-

DR JC BAKER 3/21/96 | APP T ELBIN 3/21/96
CHK C.ERISMAN 3/21/96 | REL B. MORGAN 7/22/96

AMP Incorporated Harrisburg, PA 17105-3608

NAME END FEED HDM APPLICATOR | MACHINE REF MINI APPL

SCALE - | D | DWG NO 680291 | SHEET 1 OF 1 | REV B

THIS DRAWING IS A CONTROLLED DOCUMENT FOR AMP INCORPORATED. IT IS SUBJECT TO CHANGE AND THE CONTROLLING ENGINEERING DRAWING(S) FOR THIS ASSY SHOULD BE CONTACTED FOR THE LATEST REVISION.

THIS INFORMATION IS CONFIDENTIAL AND IS DISCLOSED TO YOU ON CONDITION THAT YOU WILL NOT DISCLOSE IT TO ANY OTHER THAN AMP PERSONNEL WITHOUT WRITTEN AUTHORIZATION FROM AMP INCORPORATED, HARRISBURG, PA.