DRAWING MADE IN THIRD ANGLE PROJECTION

680133 ⇔ 680133

<UT161B>DEPT2230>AMP07567>U.MINI-APPL

| PART NUMBER | REV | FIRST USED |
|---|---|---|
| 680133-1 | B | 854400-1 |
| 680133-2 | B | 565435-5 |
| 680133-3 | B | 354500-1 |

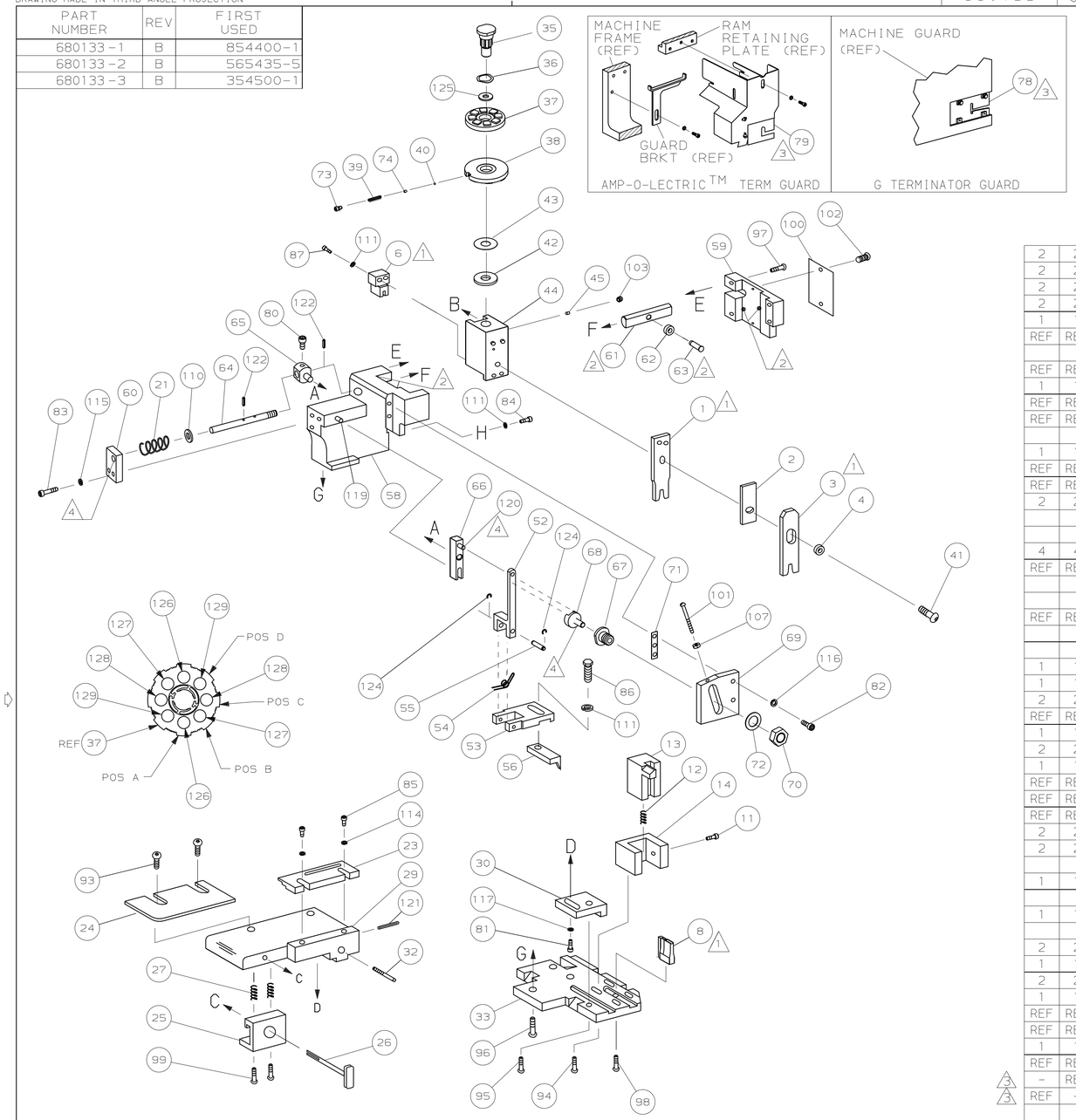


| TERMINAL NAME: RECPT CONTACT, POWER SUPPLY | | |
|---|---|---|
| | | 292002 |
| TERM APPL SPEC | | - |

| CRIMPING DATA | | |
|---|---|---|
| PAD LTR | CRIMP HEIGHT | WIRE SIZE |
| A | .051 ±.002 | 18 |
| B | .045 ±.002 | 20 |
| C | .042 ±.002 | 22 |
| D | .040 ±.002 | 24 |

| CRIMP | SIZE | TYPE | RANGE |
|---|---|---|---|
| WIRE | .070 | F | 24-18 |
| INSUL | .100 | O | .110 MAX |

| FEED | APPL INST | SET UP GAGE | LAYOUT |
|---|---|---|---|
| .309 | 408-8040 | 458637-1 | L1612 |
| WIRE STRIP LENGTH | | - | |

| -1 | LEADMAKER | MECH POST FEED |
|---|---|---|
| -2 | BENCH MODEL K | MECH PRE FEED |
| -3 | BENCH MODEL G | MECH PRE FEED |

| -3 | -2 | -1 | U/M | DWG SIZE | PART NO | DESCRIPTION | ITEM NO |
|---|---|---|---|---|---|---|---|
| 2 | 2 | 2 | - | C | 3-354779-8 | PIN, WIRE DISC (.3180)D | 129 |
| 2 | 2 | 2 | - | C | 3-354779-4 | PIN, WIRE DISC (.3160)C | 128 |
| 2 | 2 | 2 | - | C | 2-354779-9 | PIN, WIRE DISC (.3135)B | 127 |
| 2 | 2 | 2 | - | C | 1-354779-5 | PIN, WIRE DISC (.3065)A | 126 |
| 1 | 1 | 1 | - | A | 986950-1 | WASHER, FLAT PRECISION | 125 |
| REF | REF | REF | - | A | 21045-3 | RING,RET "C"(ø.187)FD FING PIN | 124 |
| | | | | | | | 123 |
| REF | REF | REF | - | A | 5-21028-1 | PIN,SLT SPR(ø.125x.50)ADJ ROD | 122 |
| 1 | 1 | 1 | - | A | 4-21028-0 | PIN,SLT SPR(ø.093x.75)ST GDE PL | 121 |
| REF | REF | REF | - | A | 1-21030-1 | PIN,DOWEL(ø.187x.50)LEVER | 120 |
| REF | REF | REF | - | A | 1-21030-6 | PIN,DOWEL(ø.187x1.25)HOUSING | 119 |
| | | | | | | | 118 |
| 1 | 1 | 1 | - | A | 21024-5 | WASHER, LOCK(#10)ADJ BLOCK | 117 |
| REF | REF | REF | - | A | 21024-5 | WASHER,LOCK(#10)ADJ PLATE | 116 |
| REF | REF | REF | - | A | 21024-5 | WASHER,LOCK(#10)FEED GDE ROD | 115 |
| 2 | 2 | 2 | - | A | 21024-2 | WASHER,LOCK(#4)FRONT STP GUIDE | 114 |
| | | | | | | | 113 |
| | | | | | | | 112 |
| 4 | 4 | 4 | - | A | 21024-4 | WASHER,LOCK(#8)STRIPPER | 111 |
| REF | REF | REF | - | A | 21899-4 | WASHER,FLAT(ø5/16)SCREW ADJ | 110 |
| | | | | | | | 109 |
| | | | | | | | 108 |
| REF | REF | REF | - | A | 21018-5 | NUT,HEX(6-32)FEED ADJ | 107 |
| | | | | | | | 106 |
| | | | | | | | 105 |
| 1 | 1 | - | - | A | 992031-1 | PIN, CLEVIS | 104 |
| 1 | 1 | 1 | - | A | 21009-2 | SCR,SKT SET(1/4-20x.25 LW)RAM | 103 |
| 2 | 2 | 2 | - | A | 21017-2 | SCR,DRIVE(#2x.19)ID PLATE | 102 |
| REF | REF | REF | - | A | 6-23715-5 | SCR,PAN HD(6-32x1.50)FEED ADJ | 101 |
| 1 | 1 | 1 | - | B | 461264-1 | PLATE, IDENTIFICATION | 100 |
| 2 | 2 | 2 | - | A | 3-21002-0 | SCR,BHC(10-32x.88)DRAG | 99 |
| 1 | 1 | 1 | - | A | 22733-8 | SCR,BHC(8-32x.38 LW)ANVIL | 98 |
| REF | REF | REF | - | A | 2-21002-9 | SCR,BHC(10-32x.75)CAP | 97 |
| REF | REF | REF | - | A | 2-22733-8 | SCR,BHC(1/4-20x.62)HOUSING | 96 |
| REF | REF | REF | - | A | 2-21002-7 | SCR,BHC(10-32x.50)SG ADJ BLOCK | 95 |
| 2 | 2 | 2 | - | A | 2-21002-2 | SCR,BHC(8-32x.50)SHEAR | 94 |
| 2 | 2 | 2 | - | A | 2-21002-1 | SCR,BHC(8-32x..38)R STRIP GUIDE | 93 |
| | | | | | | | 92 |
| 1 | 1 | 1 | - | A | 1-21002-7 | SCR,BHC(6-32x.38)CAM | 91 |
| | | | | | | | 90 |
| 1 | 1 | - | - | A | 7-21000-9 | SCR,SHC(4-40x.19)STRIPPER | 89 |
| | | | | | | | 88 |
| 2 | 2 | 2 | - | A | 2-21000-9 | SCR,SHC(8-32X.75)DEP-HOLD | 87 |
| 1 | 1 | 1 | - | A | 2-22603-0 | SCR,HEX HD(8-32x.31)FEED FINGER | 86 |
| 2 | 2 | 2 | - | A | 1-21000-4 | SCR,SHC(4-40X.38)F ST GUIDE | 85 |
| 1 | 1 | 1 | - | A | 2-21000-7 | SCR,SHC(8-32x.50)STRIPPER | 84 |
| REF | REF | REF | - | A | 3-21000-7 | SCR,SHC(10-32x.75)FEED ROD GD | 83 |
| REF | REF | REF | - | A | 3-21000-6 | SCR,SHC(10-32x.62)FD ADJ BLK | 82 |
| 1 | 1 | 1 | - | A | 3-21000-4 | SCR,SHC(10-32x.38)SG ADJ BL | 81 |
| REF | REF | REF | - | A | 3-21000-4 | SCR,SHC(10-32x.38)PIVOT BLK | 80 |
| - | REF | - | - | B | 455749-1 | GUARD, WINDOW | 79 |
| REF | - | - | - | B | 679532-1 | INSERT, GUARD | 78 |
| | | | | | | | 77 |
| | | | | | | | 76 |
| | | | | | | | 75 |
| 1 | 1 | 1 | - | A | 690603-1 | SPRING, ASSIST | 74 |
| 1 | 1 | 1 | - | A | 23030-1 | SCR,SHC(6-32x.25 SL)INS DISC | 73 |
| REF | REF | REF | - | A | 458109-1 | WASHER, SPECIAL | 72 |
| REF | REF | REF | - | A | 690517-1 | SPACER | 71 |

QTY REQD PER ASSY — REVISION OF EACH ASSY NO (WHEN BLANK, USE DWG REVISION) — PARTS LIST

| -3 | -2 | -1 | U/M | DWG SIZE | PART NO | DESCRIPTION | ITEM NO |
|---|---|---|---|---|---|---|---|
| REF | REF | REF | - | B | 22594-8 | NUT,HEX(1/2-20) | 70 |
| REF | REF | REF | - | B | 240628-1 | PLATE, ADJUSTMENT | 69 |
| REF | REF | REF | - | B | 240626-1 | SHAFT, PIVOT | 68 |
| REF | REF | REF | - | B | 240633-1 | BUSHING | 67 |
| REF | REF | REF | - | A | 455680-1 | LEVER, INTERMEDIATE | 66 |
| REF | REF | REF | - | B | 240629-1 | BLOCK, PIVOT | 65 |
| REF | REF | REF | - | A | 240632-2 | SCREW, ADJ FEED ROD | 64 |
| REF | REF | REF | - | B | 240659-3 | PIN, CAM ROLLER | 63 |
| REF | REF | REF | - | B | 240658-1 | ROLLER, CAM | 62 |
| REF | REF | REF | - | B | 454398-2 | ROD, FEED | 61 |
| REF | REF | REF | - | A | 454178-1 | GUIDE, FEED ROD | 60 |
| REF | REF | REF | - | C | 454220-1 | CAP, RAM | 59 |
| REF | REF | REF | - | D | 454485-1 | HOUSING | 58 |
| | | | | | | | 57 |
| 1 | 1 | 1 | - | B | 2-694433-9 | PAWL, FEED | 56 |
| REF | REF | REF | - | B | 240624-1 | PIN, FEED FINGER | 55 |
| REF | REF | REF | - | B | 691499-1 | SPRING, FEED FINGER | 54 |
| REF | REF | REF | - | B | 690541-1 | HOLDER, FEED FINGER | 53 |
| REF | REF | REF | - | A | 455679-1 | LEVER, TERMINAL FEED ARM | 52 |
| | | | | | | | 51 |
| | | | | | | | 50 |
| 1 | - | - | - | B | 690602-6 | CAM, PRE-FEED 1 5/8 ST | 49 |
| - | 1 | - | - | B | 690602-5 | CAM, PRE-FEED 1 1/8 ST | 48 |
| - | - | 1 | - | B | 690501-4 | CAM, POST-FEED 1 5/8 ST | 47 |
| 1 | 1 | 1 | - | B | 459456-1 | APPLICATOR, BASIC (SUBASSY) | 46 |
| 1 | 1 | 1 | - | A | 690191-1 | PLUG, NYLON | 45 |
| 1 | 1 | 1 | - | C | 455673-1 | RAM | 44 |
| 1 | 1 | 1 | - | A | 690125-1 | WASHER, LAMINATED | 43 |
| 1 | 1 | 1 | - | A | 690124-1 | WASHER, RAM | 42 |
| 1 | 1 | 1 | - | A | 7-21002-9 | BOLT, CRIMPER(5/16x1.00) | 41 |
| 1 | 1 | 1 | - | A | 23241-6 | BALL, STEEL | 40 |
| 1 | 1 | 1 | - | A | 690170-1 | SPRING, COMPRESSION | 39 |
| 1 | 1 | 1 | - | C | 690142-1 | DISC, INSULATION | 38 |
| 1 | 1 | 1 | - | D | 354777-1 | WIRE DISC, PLASTIC | 37 |
| 1 | 1 | 1 | - | A | 22480-5 | WASHER, SPRING | 36 |
| 1 | 1 | 1 | - | B | 690212-1 | POST, RAM | 35 |
| | | | | | | | 34 |
| REF | REF | REF | - | D | 455675-1 | PLATE, BASE | 33 |
| 1 | 1 | 1 | - | A | 690432-3 | SCREW, ADJUSTMENT | 32 |
| | | | | | | | 31 |
| REF | REF | REF | - | B | 455689-1 | BLOCK, STRIP GUIDE ADJ | 30 |
| 1 | 1 | 1 | - | C | 217821-1 | PLATE, STRIP GUIDE | 29 |
| | | | | | | | 28 |
| 2 | 2 | 2 | - | A | 1-22284-0 | SPRING, DRAG | 27 |
| 1 | 1 | 1 | - | B | 690546-1 | LEVER, DRAG RELEASE | 26 |
| 1 | 1 | 1 | - | B | 224404-1 | DRAG, TERMINAL | 25 |
| 1 | 1 | 1 | - | B | 217817-1 | GUIDE, STRIP (REAR) | 24 |
| 1 | 1 | 1 | - | B | 217816-1 | GUIDE, STRIP (FRONT) | 23 |
| - | - | 1 | - | B | 690472-9 | STRIPPER | 22 |
| REF | REF | REF | - | A | 4-22284-9 | SPRING, FEED RETURN | 21 |
| 1 | 1 | - | - | A | 679218-1 | STRIPPER WIRE STOP ASSY | 20 |
| 1 | 1 | - | - | B | 458949-8 | STRIPPER | 19 |
| | | | | | | | 18 |
| | | | | | | | 17 |
| | | | | | | | 16 |
| | | | | | | | 15 |
| 1 | 1 | 1 | - | C | 217819-1 | HOLDER, TERMINAL SUPPORT | 14 |
| 1 | 1 | 1 | - | C | 217818-1 | SUPPORT, FLOATING | 13 |
| 1 | 1 | 1 | - | A | 4-22280-2 | SPRING, SHEAR | 12 |
| 1 | 1 | 1 | - | B | 690461-1 | STOP, SHEAR | 11 |
| | | | | | | | 10 |
| | | | | | | | 9 |
| 1 | 1 | 1 | - | C | 217822-1 | ANVIL | 8 |
| | | | | | | | 7 |
| 1 | 1 | 1 | - | C | 217820-1 | BLADE, SHEAR | 6 |
| | | | | | | | 5 |
| 1 | 1 | 1 | - | B | 1-238009-2 | SPACER, BLOCK CRIMPER | 4 |
| 1 | 1 | 1 | - | C | 3-683454-1 | CRIMPER, INSULATION | 3 |
| 1 | 1 | 1 | - | C | 455888-3 | SPACER, CRIMPER | 2 |
| 1 | 1 | 1 | - | C | 3-456404-8 | CRIMPER, WIRE | 1 |

QTY REQD PER ASSY — REVISION OF EACH ASSY NO (WHEN BLANK, USE DWG REVISION) — PARTS LIST

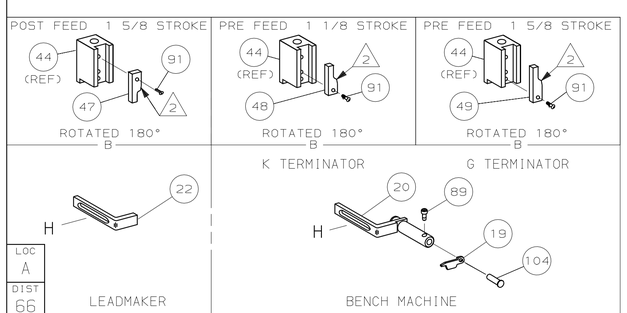


1. RECOMMENDED SPARE PARTS.
2. GREASE LIGHTLY.
3. GUARD MUST BE IN PLACE WHEN OPERATING APPLICATOR IN A BENCH MACHINE.
4. LUBRICATE DAILY USING NO. 20 MACHINE OIL.
5. ITEMS WITH QTY OF REF SPECIFIED (EXCEPT ITEMS 78 AND 79) ARE USED ON ITEM 46.

| P | F | LTR | REVISION RECORD | APP | DATE |
|---|---|---|---|---|---|
| | | B | 0150-6628-96 | CE | 2-96 |
| | | A | REVISED | CE | 3-95 |

DIMENSIONS IN INCHES. DO NOT SCALE PRINT. TOLERANCES UNLESS OTHERWISE SPECIFIED: 2 PLC DEC ±- 3 PLC DEC ±- 4 PLC DEC ±- ANGLES ± - SURF TEXTURE, √ REMOVE BURRS, BREAK SHARP EDGES R.015 MAX

MATL - - HT TR - - FIN - -

DR 10/24/94 R O WILSON | APP 11-2-94 T ELBIN | CHK 11-1-94 C ERISMAN | REL 3/17/95 B. MORGAN

AMP Incorporated Harrisburg, PA 17105-3608

NAME SIDE FEED HDM APPLICATOR | MACHINE REF MINI APPL | SCALE - | D | DWG NO 680133 | SHEET 1 OF 1 | REV B


THIS DRAWING IS A CONTROLLED DOCUMENT FOR AMP INCORPORATED. IT IS SUBJECT TO CHANGE AND THE CONTROLLING ENGINEERING ORGANIZATION SHOULD BE CONTACTED FOR THE LATEST REVISION.

THIS INFORMATION IS CONFIDENTIAL AND IS DISCLOSED TO YOU ON CONDITION THAT IT IS NOT TO BE DISCLOSED TO ANY OTHER THAN AMP PERSONNEL WITHOUT WRITTEN AUTHORIZATION FROM AMP INCORPORATED.