THIS DRAWING IS UNPUBLISHED. RELEASED FOR PUBLICATION 2017
© COPYRIGHT 2017 BY TYCO ELECTRONICS CORPORATION. ALL RIGHTS RESERVED.

ATLANTIC VERSION TERMINATOR INTERFACE ADAPTER

PART NUMBER	REVISION	DESCRIPTION	FEED TYPE
2836600-1	D	FINE CRIMP HEIGHT ADJUST	MECHANICAL
2836600-2	D	FINE CRIMP HEIGHT ADJUST	PNEUMATIC
7-2836600-1	D	MECHANICAL AND CRIMP TOOLING KIT	MECHANICAL
7-2836600-2	D	PNEUMATIC AND CRIMP TOOLING KIT	PNEUMATIC
7-2836600-7	A	CRIMP TOOLING KIT	-

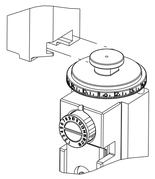

LOC	DIST
A	66

REVISIONS

P	LTR	DESCRIPTION	DATE	DWN	APVD
	B	ECR-18-002375	16FEB2018	JAH	CT
	C	ECR-18-015471	28SEP2018	FL	TE
	C1	ECR-22-149859	18AUG2022	JWC	TE
	D	ECR-23-189874	17OCT2023	FZ	TE

APPLICATOR DATA		
CRIMP	SIZE	TYPE
WIRE	3.76 mm [.148]	F
INSUL	5.08 mm [.200]	O
APPLICATOR INSTRUCTIONS 408-35042		

TERMINAL DATA: TE TERMINAL			TE CRIMP SPECIFICATION
TERMINAL NAME: 2.8mm SEALED, RECEPTACLE			
WIRE STRIP LENGTH 4.80-5.60 mm [.189-.220 IN]		TERMINAL INSULATION DIAMETER RANGE ∅ 1.2-2.7 mm [.047-.106 IN]	
TERMINAL APPLICATION SPECIFICATION	114-13013	-	-
	-	-	-

TERMINALS APPLIED

TE TERMINAL	TE TERMINAL	FORD SEAL	YAZAKI SEAL	SEAL INSULATION DIAMETER RANGE
1-1326031-2	1-1326032-2	F8ZB-14603-AA	7158-3110-40	∅3.10-3.30 mm

WIRE SIZE	CRIMP HEIGHT mm [INCH]	CRIMP HEIGHT REFERENCE SETTING 4
12 AWG	1.75+/-0.05 [.069+/-.002]	6.0

1. RECOMMENDED SPARE PARTS
2. REFER TO SUPPLIED INSTRUCTION SHEET FOR CLEANING, LUBRICATION AND STORAGE OF APPLICATOR.
3. APPLY PART NUMBER 2-23419-6 LOCTITE TO THREADS OF ITEM 242.
4. CRIMP HEIGHT REFERENCE SETTING WAS THE SETTING USED WHEN THE APPLICATOR WAS QUALIFIED AT THE FACTORY. ADJUSTMENT MAY BE NECESSARY WHEN RUNNING APPLICATOR IN THE FIELD.
5. UNLESS SPECIFIED OTHERWISE TORQUE VALUES SHALL BE USED PER DOCUMENT, 101-35000.
6. APPLY TORQ-SEAL IN ALLEN SOCKET TO FILL HOLE AFTER FLAT HD HAS BEEN ADJUSTED TO CORRECT HEIGHT AT QUALIFICATION. APPLY #1-23419-5 LOC-TITE TO THREADS.
7. WHEN RUNNING SOCKET TERMINALS, POSITION ITEM 7 BEHIND ITEM 50.
8. POSITION ITEM 34, 2.8±0.5 FOR PIN TERMINALS. POSITION ITEM 34, 4.6±0.5 FOR SOCKET TERMINALS.

*WARNING
ON INSTALLATION, SET WIRE DISC TO CRIMP HEIGHT REFERENCE SETTING FOR LARGEST WIRE SIZE. CRIMP HEIGHT REFERENCE SETTINGS GREATER THAN THE VALUE SHOWN MAY CAUSE DAMAGE TO THE CRIMP TOOLING, REFER TO THE INSTRUCTION SHEET FOR PROPER SETUP AND ADJUSTMENTS.

					PART NO	DESCRIPTION	ITEM NO
	-77	-72	-71	-2	-1		
	-	2	2	2	2	2168083-1	SCR, SKT HD CAP, RoHS, M3 X 8.0	269
	-	1	1	1	1	1633782-4	FENCE	267
	-	1	1	1	1	1803078-3	SPACER, PRECISION	259
	-	1	-	1	-	2119641-1	FEED CAM, AIR FEED	248
	-	1	1	1	1	2119082-3	CAM, SNAIL, INSULATION ADJUSTMENT	244
	-	1	1	1	1	2079764-1	WASHER, WAVE SPRING, CREST-TO-CREST	243
3	-	1	1	1	1	2119083-1	RETAINER, INSULATION DIAL	242
	-	1	1	1	1	7-18023-7	SCR, SKT HD CAP M3 X 4.0	241
	-	-	1	-	1	2119580-1	MECHANICAL FEED ASSEMBLY	239
	-	1	-	1	-	2844940-1	AIR FEED MODULE	238
	-	REF	REF	REF	REF	994970-2	COUNTER, MAGNETIC	164
	-	1	1	1	1	1-22281-8	SPRING, COMPRESSION	121
	-	1	1	1	1	2844908-1	SCREW, LOCKING	99
	-	1	1	1	1	2844907-1	POST, LOCKING	98
	-	1	1	1	1	1-690438-0	FRONT STRIP GUIDE	96
	-	2	2	2	2	2168083-1	SCR, SKT HD CAP, RoHS, M3 X 8.0	95
	-	1	1	1	1	2168083-6	SCR, SKT HD CAP, RoHS, M5 X 65	93
	-	1	1	1	1	1-455888-1	SPACER, CRIMPER	82
	-	2	2	2	2	2079383-4	SCR, BHSC, RoHS (M4 X 8)	79
	-	1	1	1	1	1803096-1	EXTENSION PLATE	78
	-	1	1	1	1	1803607-3	DOCUMENTATION PACKAGE	71
	-	1	1	1	1	2119791-9	DEPRESSOR, WIRE	70
	-	1	1	1	1	2119943-1	WASHER, SPACER	69
	-	1	1	1	1	2119740-1	TAG,IDENTIFICATION	67
	-	2	2	2	2	2168078-1	SCREW, DRIVE, RH, RoHS, 2 x .188	66
	-	2	2	2	2	2-18032-5	SCR, SET, FLT PNT, M5 X 20.0	61
	-	1	1	1	1	2168083-2	SCR, SKT HD CAP, RoHS, M4 X 8.0	60
	-	1	1	1	1	5-18022-5	SCR, HEX HD CAP, M4 X 6.0	59
6	-	1	1	1	1	985575-3	SCR, FLT SKT HD CAP M3 X 10.0	57
	-	1	1	1	1	1338683-8	FEED PAWL	56
	-	4	4	4	4	2168083-3	SCR, SKT HD CAP, RoHS, M4 X 12.0	54
	-	2	2	2	2	2-2168083-5	SCR, SKT HD CAP, RoHS, M4 X 14	53
	-	1	1	1	1	5018030-1	NUT, HEX, REG, RoHS, M3	52
	-	1	1	1	1	811242-5	BUMPER, HOLD DOWN	51
	-	1	1	1	1	690753-2	SPACER, TONKER	50
	-	1	2	1	2	18023-9	SCR, SKT HD CAP M4 X 6.0	49
	-	-	1	-	1	2119652-1	FEED CAM, PRE FEED	48
	-	-	1	-	1	2119653-1	FEED CAM, POST FEED	47
	-	1	1	1	1	1803583-9	APPLICATOR BASIC ASSEMBLY, SF	46
	-	1	1	1	1	1803515-2	RAM ASSEMBLY, SF ATLANTIC	44
	-	1	1	1	1	1803602-2	SCR, BHSC, RoHS (M8 X 40)	41
8	-	1	1	1	1	1752356-6	SUPPORT, TERMINAL	34
	-	2	2	2	2	2079383-5	SCR, BHSC, RoHS (M4 X 20)	33
	-	2	2	2	2	2-2844962-3	SPACER, CYLINDRICAL, STRIP GUIDE	30
	-	1	1	1	1	2844938-5	PLATE, STRIP GUIDE	29
	-	1	1	1	1	1-455888-0	SPACER, CRIMPER	28
	-	2	2	2	2	22283-1	SPRING, COMPRESSION	27
	-	1	1	1	1	356835-1	LEVER, DRAG RELEASE	26
	-	1	1	1	1	240792-1	DRAG, TERMINAL	25
	-	1	1	1	1	1320928-4	STRIP GUIDE	24
	-	1	1	1	1	980371-4	SCR, SKT HD SHLDR 5.0 DIA X 6.0	23
	-	1	1	1	1	2168083-2	SCR, SKT HD CAP, RoHS, M4 X 8.0	21
	-	2	2	2	2	1-18028-2	WASHER, FLAT, REG M4	20
	-	1	1	1	1	2119533-1	STRIPPER, SIDE FEED	19
1	-	1	1	1	1	2119806-1	INSERT, SHEAR	13
	-	1	1	1	1	3-22280-3	SPRING, COMPRESSION	12
	-	1	1	1	1	1-356885-4	STOP, SHEAR	11
1	-	1	1	1	1	2119805-1	SHEAR HOLDER, FRONT	10
1	-	1	1	1	1	1803095-5	FLOATING SHEAR, FRONT	9
1	1	2	2	1	1	5-1803252-2	ANVIL, COMBINATION	8
7	-	1	1	1	1	1-240641-6	SPACER	7
	-	-	-	-	-	-	-	6
	-	1	1	1	1	2-2119781-4	DEPRESSOR, SHEAR	5
	-	1	1	1	1	3-238011-5	BLOCK, CRIMPER SPACER	4
1	1	2	2	1	1	4-1633965-8	CRIMPER, INSULATION O PREMIUM	3
	-	1	1	1	1	1-455888-4	SPACER, CRIMPER	2
1	1	2	2	1	1	8-1803241-3	CRIMPER, WIRE F	1

ATLANTIC VERSION

Shown on sheets 1 of 4 & 2 of 4
(Pacific version shown on sheets 3 of 4 & 4 of 4)

THIS DRAWING IS A CONTROLLED DOCUMENT FOR TYCO ELECTRONICS CORPORATION IT IS SUBJECT TO CHANGE AND THE CONTROLLING ENGINEERING ORGANIZATION SHOULD BE CONTACTED FOR THE LATEST REVISION.

DIMENSIONS: mm
TOLERANCES UNLESS OTHERWISE SPECIFIED:
0 PLC ±-
1 PLC ±-
2 PLC ±-
3 PLC ±-
4 PLC ±-
ANGLES ±-
MATERIAL - -
FINISH - -

DWN	B. WEAVER	24JAN2017
CHK	T. ELBIN	24JAN2017
APVD	T. ELBIN	24JAN2017
PRODUCT SPEC	-	
APPLICATION SPEC	-	
WEIGHT	-	

TE Connectivity
Harrisburg, PA 17105-3608

NAME: Ocean Side Feed Applicator -

SIZE	CAGE CODE	DRAWING NO	RESTRICTED TO
A1	00779	C-2836600	-

Customer Accessible Production Drawing | SCALE 1:2 | SHEET 1 OF 4 | REV D

SHEETS 3 & 4 ARE NOT REQUIRED FOR ATLANTIC VERSION

THIS DRAWING IS UNPUBLISHED. RELEASED FOR PUBLICATION 2017
© COPYRIGHT 2017 BY TYCO ELECTRONICS CORPORATION. ALL RIGHTS RESERVED.

LOC	DIST
A	66

REVISIONS

P	LTR	DESCRIPTION	DATE	DWN	APVD
	-	SEE SHEET 1	-	-	-

FEED TYPE

MECHANICAL

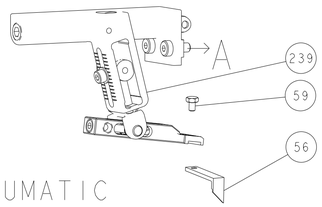

PNEUMATIC

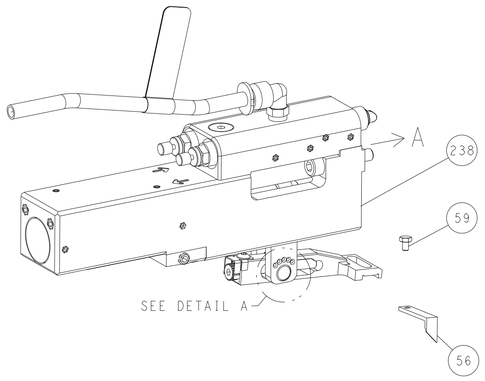

FEED SPRING SETTING POSITION
(SHOWN FROM REAR SIDE)

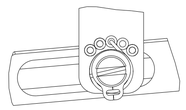

DETAIL A

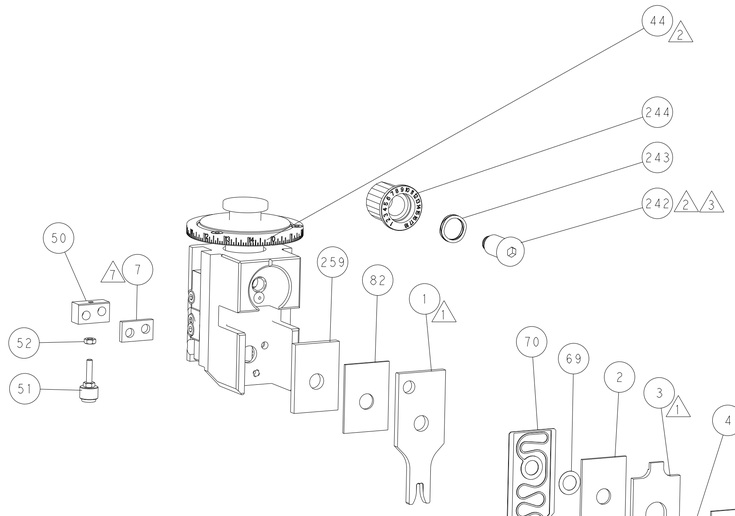

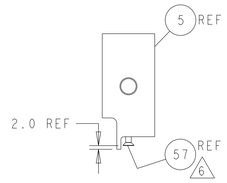

SHEAR DEPRESSOR DETAIL

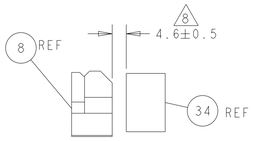

TERMINAL SUPPORT LOCATION

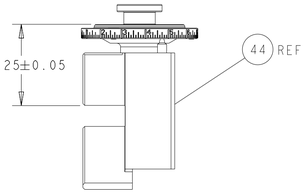

RAM SET-UP

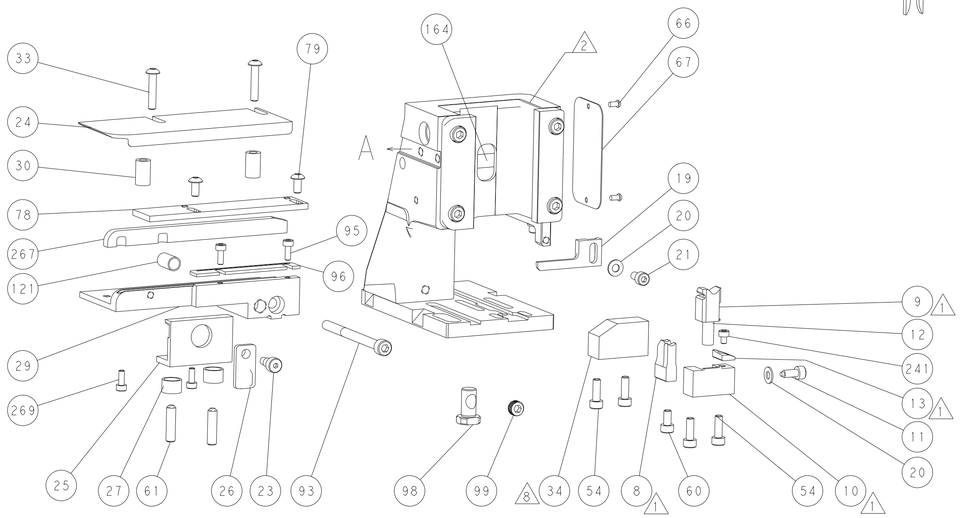

CAM POSITIONS

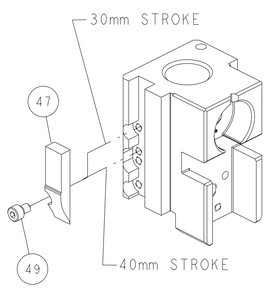

MECHANICAL
POST FEED

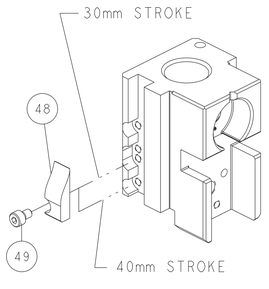

MECHANICAL
PRE FEED

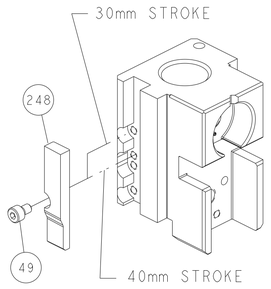

AIR FEED

ITEM 30 LOCATED AT
FRONT HOLES

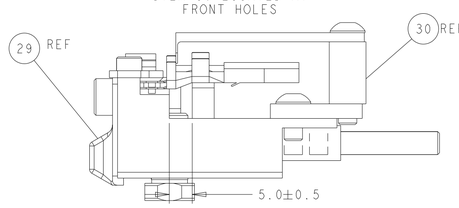

FEED TRACK POSITION
GUIDE BY INSULATION BARREL

ATLANTIC VERSION

Shown on sheets 1 of 4 & 2 of 4
(Pacific version shown on sheets 3 of 4 & 4 of 4)

THIS DRAWING IS A CONTROLLED DOCUMENT FOR TYCO ELECTRONICS CORPORATION. IT IS SUBJECT TO CHANGE AND THE CONTROLLING ENGINEERING ORGANIZATION SHOULD BE CONTACTED FOR THE LATEST REVISION.

DIMENSIONS: mm

TOLERANCES UNLESS OTHERWISE SPECIFIED:
0 PLC ±-
1 PLC ±-
2 PLC ±-
3 PLC ±-
4 PLC ±-
ANGLES ±-

MATERIAL - -
FINISH - -

DWN B. WEAVER	24JAN2017	TE Connectivity, Harrisburg, PA 17105-3608
CHK T. ELBIN	24JAN2017	
APVD T. ELBIN	24JAN2017	NAME Ocean Side Feed Applicator -
PRODUCT SPEC -		
APPLICATION SPEC -		
WEIGHT -		SIZE A1 · CAGE CODE 00779 · DRAWING NO C-2836600 · RESTRICTED TO -
Customer Accessible Production Drawing		SCALE 1:2 · SHEET 2 OF 4 · REV D

SHEETS 3 & 4 ARE NOT REQUIRED FOR ATLANTIC VERSION

THIS DRAWING IS UNPUBLISHED. RELEASED FOR PUBLICATION 2017
© COPYRIGHT 2017 BY TYCO ELECTRONICS CORPORATION. ALL RIGHTS RESERVED.

LOC	DIST
A	66

REVISIONS

P	LTR	DESCRIPTION	DATE	DWN	APVD
	-	SEE SHEET 1	-	-	-

PART NUMBER	REVISION	DESCRIPTION	FEED TYPE
2-2836600-1	D	FINE CRIMP HEIGHT ADJUST	MECHANICAL
2-2836600-2	D	FINE CRIMP HEIGHT ADJUST	PNEUMATIC
7-2836600-7	A	CRIMP TOOLING KIT	-

PACIFIC VERSION TERMINATOR INTERFACE ADAPTER

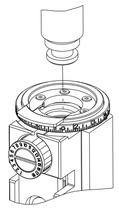

APPLICATOR DATA		
CRIMP	SIZE	TYPE
WIRE	3.76 mm [.148]	F
INSUL	5.08 mm [.200]	O
APPLICATOR INSTRUCTIONS 408-35042		

TERMINAL DATA: TE TERMINAL		TE CRIMP SPECIFICATION
TERMINAL NAME: 2.8mm SEALED, RECEPTACLE		
WIRE STRIP LENGTH 4.80-5.60 mm [.189-.220 IN]	TERMINAL INSULATION DIAMETER RANGE ∅1.2-2.7 mm [.047-.106 IN]	
TERMINAL APPLICATION SPECIFICATION	114-13013	- -
	-	- -

TERMINALS APPLIED

TE TERMINAL	TE TERMINAL	FORD SEAL	YAZAKI SEAL	SEAL INSULATION DIAMETER RANGE
1-1326031-2	1-1326032-2	F8ZB-14603-AA	7158-3110-40	∅3.10-3.30 mm

WIRE SIZE	CRIMP HEIGHT mm [INCH]	CRIMP HEIGHT REFERENCE SETTING 4
12 AWG	1.75+/-0.05 [.069+/-.002]	6.0

1 RECOMMENDED SPARE PARTS

2 REFER TO SUPPLIED INSTRUCTION SHEET FOR CLEANING, LUBRICATION AND STORAGE OF APPLICATOR.

3 APPLY PART NUMBER 2-23419-6 LOCTITE TO THREADS OF ITEM 242.

4 CRIMP HEIGHT REFERENCE SETTING WAS THE SETTING USED WHEN THE APPLICATOR WAS QUALIFIED AT THE FACTORY. ADJUSTMENT MAY BE NECESSARY WHEN RUNNING APPLICATOR IN THE FIELD.

5. UNLESS SPECIFIED OTHERWISE TORQUE VALUES SHALL BE USED PER DOCUMENT, 101-35000.

6 APPLY TORQ-SEAL IN ALLEN SOCKET TO FILL HOLE AFTER FLAT HD HAS BEEN ADJUSTED TO CORRECT HEIGHT AT QUALIFICATION. APPLY #1-23419-5 LOC-TITE TO THREADS.

7 WHEN RUNNING SOCKET TERMINALS, POSITION ITEM 7 BEHIND ITEM 50.

8 POSITION ITEM 34, 2.8±0.5 FOR PIN TERMINALS. POSITION ITEM 34, 4.6±0.5 FOR SOCKET TERMINALS.

*WARNING
ON INSTALLATION, SET WIRE DISC TO CRIMP HEIGHT REFERENCE SETTING FOR LARGEST WIRE SIZE. CRIMP HEIGHT REFERENCE SETTINGS GREATER THAN THE VALUE SHOWN MAY CAUSE DAMAGE TO THE CRIMP TOOLING, REFER TO THE INSTRUCTION SHEET FOR PROPER SETUP AND ADJUSTMENTS.

-	2	2	2168083-1	SCR, SKT HD CAP, RoHS, M3 X 8.0	269
-	1	1	1633782-4	FENCE	267
-	1	1	1803078-3	SPACER, PRECISION	259
-	1	1	2119082-3	CAM, SNAIL, INSULATION ADJUSTMENT	244
-	1	1	2079764-1	WASHER, WAVE SPRING, CREST-TO-CREST	243
3 -	1	1	2119083-1	RETAINER, INSULATION DIAL	242
-	1	1	7-18023-7	SCR, SKT HD CAP M3 X 4.0	241
-	-	1	2119580-1	MECHANICAL FEED ASSEMBLY	239
-	1	-	2844940-1	AIR FEED MODULE	238
-	REF	REF	994970-2	COUNTER, MAGNETIC	164
-	1	-	2119641-2	FEED CAM, AIR FEED	151
-	1	1	2168083-8	SCR, SKT HD CAP, RoHS, M4 X 16	144
-	4	4	2168083-9	SCR, SKT HD CAP, RoHS, M4 X 20	143
-	-	1	2119653-2	FEED CAM, POST FEED	142
-	1	1	1-1803583-0	APPLICATOR BASIC ASSEMBLY, SF	141
-	1	1	1803516-2	RAM ASSEMBLY, SF PACIFIC	140
-	1	1	1-22281-8	SPRING, COMPRESSION	121
-	1	1	2844908-1	SCREW, LOCKING	99
-	1	1	2844907-1	POST, LOCKING	98
-	1	1	1-690438-0	FRONT STRIP GUIDE	96
-	2	2	2168083-1	SCR, SKT HD CAP, RoHS, M3 X 8.0	95
-	1	1	2168083-6	SCR, SKT HD CAP, RoHS, M5 X 65	93
-	1	1	1-455888-1	SPACER, CRIMPER	82
-	2	2	2079383-4	SCR, BHSC, RoHS (M4 X 8)	79
-	1	1	1803096-1	EXTENSION PLATE	78
-	1	1	1803607-3	DOCUMENTATION PACKAGE	71
-	1	1	2119791-9	DEPRESSOR, WIRE	70
-	1	1	2119943-1	WASHER, SPACER	69
-	1	1	2119740-1	TAG,IDENTIFICATION	67
-	2	2	2168078-1	SCREW, DRIVE, RH, RoHS, 2 x .188	66
-	2	2	2-18032-5	SCR, SET, FLT PNT, M5 X 20.0	61
-	1	1	5-18022-5	SCR, HEX HD CAP, M4 X 6.0	59
6 -	1	1	985575-3	SCR, FLT SKT HD CAP M3 X 10.0	57
-	1	1	1338683-8	FEED PAWL	56
-	2	2	2-2168083-5	SCR, SKT HD CAP, RoHS, M4 X 14	53
-	1	1	5018030-1	NUT, HEX, REG, RoHS, M3	52
-	1	1	811242-5	BUMPER, HOLD DOWN	51
-	1	1	690753-2	SPACER, TONKER	50
-	1	2	18023-9	SCR, SKT HD CAP M4 X 6.0	49
-	-	1	2119652-1	FEED CAM, PRE FEED	48
-	1	1	1803602-2	SCR, BHSC, RoHS (M8 X 40)	41
8 -	1	1	1752356-6	SUPPORT, TERMINAL	34
-	2	2	2079383-5	SCR, BHSC, RoHS (M4 X 20)	33
-	2	2	2-2844962-3	SPACER, CYLINDRICAL, STRIP GUIDE	30
-	1	1	2844938-5	PLATE, STRIP GUIDE	29
-	1	1	1-455888-0	SPACER, CRIMPER	28
-	2	2	22283-1	SPRING, COMPRESSION	27
-	1	1	356835-1	LEVER, DRAG RELEASE	26
-	1	1	240792-1	DRAG, TERMINAL	25
-	1	1	1320928-4	STRIP GUIDE	24
-	1	1	980371-4	SCR, SKT HD SHLDR 5.0 DIA X 6.0	23
-	1	1	2168083-2	SCR, SKT HD CAP, RoHS, M4 X 8.0	21
-	2	2	1-18028-2	WASHER, FLAT, REG M4	20
-	1	1	2119533-1	STRIPPER, SIDE FEED	19
1 -	1	1	2119806-1	INSERT, SHEAR	13
-	1	1	3-22280-3	SPRING, COMPRESSION	12
-	1	1	1-356885-4	STOP, SHEAR	11
1 -	1	1	2119805-1	SHEAR HOLDER, FRONT	10
1 -	1	1	1803095-5	FLOATING SHEAR, FRONT	9
1 1	1	1	5-1803252-2	ANVIL, COMBINATION	8
7 -	1	1	1-240641-6	SPACER	7
- -	-	-	-	-	6
-	1	1	2-2119781-4	DEPRESSOR, SHEAR	5
-	1	1	3-238011-5	BLOCK, CRIMPER SPACER	4
1 1	1	1	4-1633965-8	CRIMPER, INSULATION O PREMIUM	3
-	1	1	1-455888-4	SPACER, CRIMPER	2
1 1	1	1	8-1803241-3	CRIMPER, WIRE F	1
	-77	-22 -21	PART NO	DESCRIPTION	ITEM NO

PACIFIC VERSION
Shown on sheets 3 of 4 & 4 of 4
(Atlantic version shown on sheets 1 of 4 & 2 of 4)

THIS DRAWING IS A CONTROLLED DOCUMENT FOR TYCO ELECTRONICS CORPORATION IT IS SUBJECT TO CHANGE. ANY OTHER USER OR MANUFACTURING ORGANIZATION SHOULD BE CONTACTED FOR THE LATEST REVISION.

DIMENSIONS: mm
TOLERANCES UNLESS OTHERWISE SPECIFIED: 0 PLC ±- 1 PLC ±- 2 PLC ±- 3 PLC ±- 4 PLC ±- ANGLES ±-
MATERIAL - -
FINISH - -

DWN	B. WEAVER	24JAN2017
CHK	T. ELBIN	24JAN2017
APVD	T. ELBIN	24JAN2017
PRODUCT SPEC	-	
APPLICATION SPEC	-	
WEIGHT	-	

TE Connectivity
Harrisburg, PA 17105-3608

NAME: Ocean Side Feed Applicator -

SIZE	CAGE CODE	DRAWING NO	RESTRICTED TO
A1	00779	C-2836600	-

Customer Accessible Production Drawing | SCALE 1:2 | SHEET 3 OF 4 | REV D

SHEETS 1 & 2 ARE NOT REQUIRED FOR PACIFIC VERSION

THIS DRAWING IS UNPUBLISHED. RELEASED FOR PUBLICATION 2017
© COPYRIGHT 2017 BY TYCO ELECTRONICS CORPORATION. ALL RIGHTS RESERVED.

LOC	DIST
A	66

REVISIONS

P	LTR	DESCRIPTION	DATE	DWN	APVD
	-	SEE SHEET 1	-	-	-

FEED TYPE

MECHANICAL

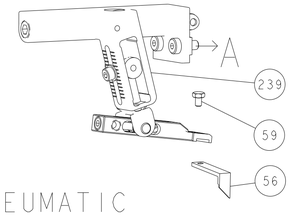

PNEUMATIC

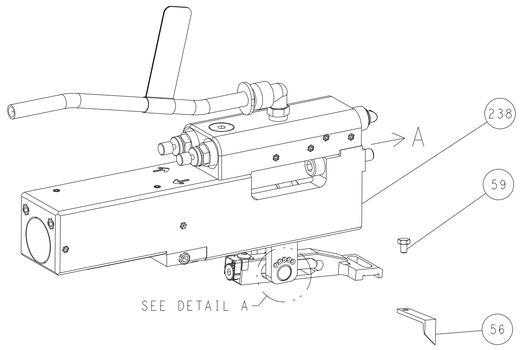

FEED SPRING SETTING POSITION
(SHOWN FROM REAR SIDE)

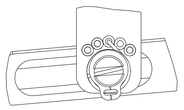

DETAIL A

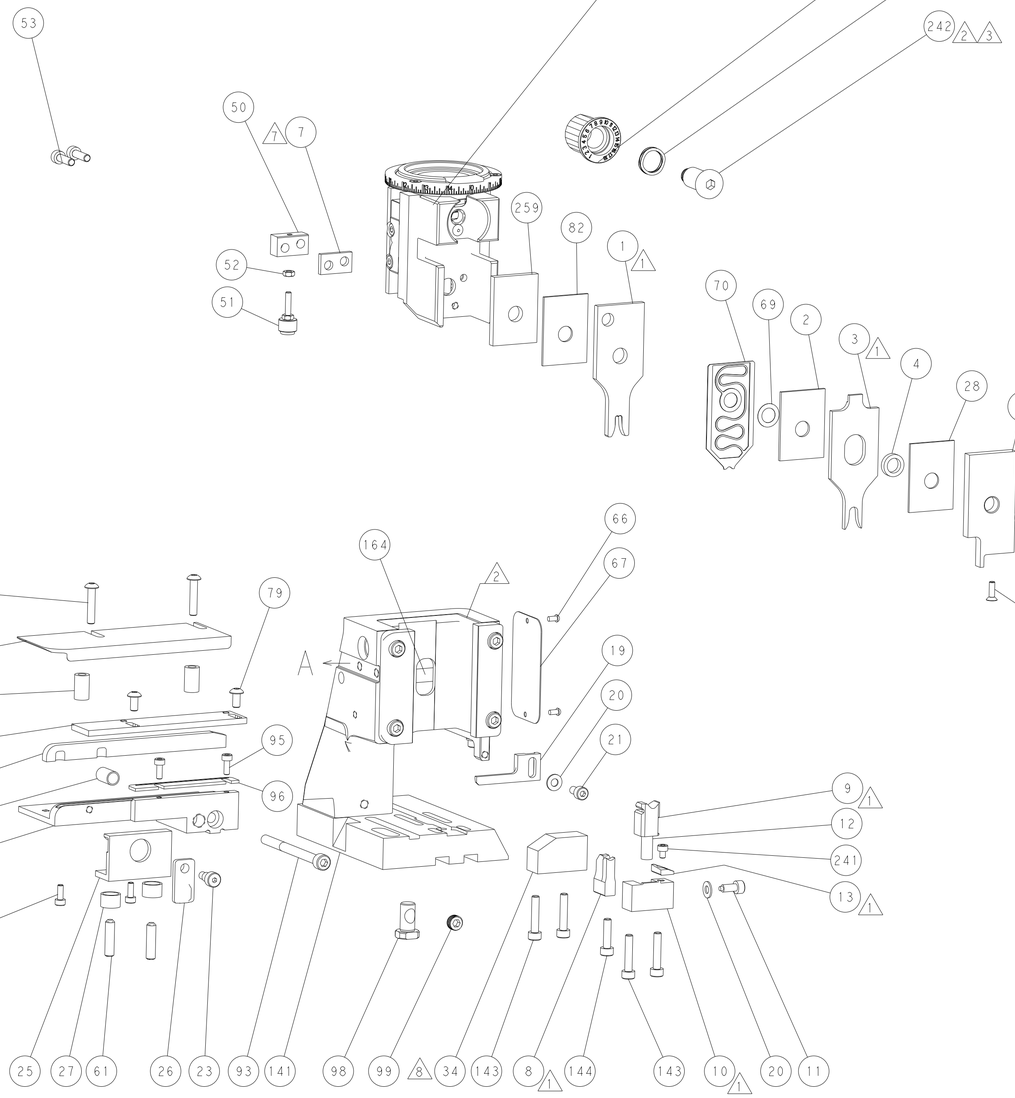

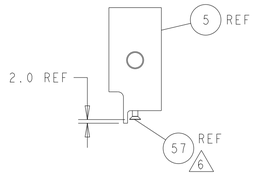

SHEAR DEPRESSOR DETAIL

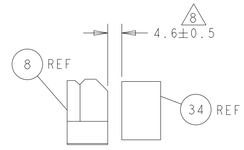

TERMINAL SUPPORT LOCATION

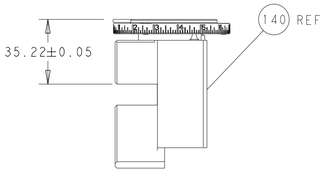

RAM SET-UP

ITEM 30 LOCATED AT
FRONT HOLES

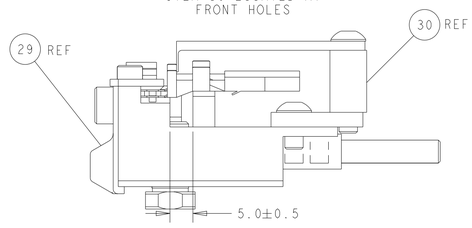

FEED TRACK POSITION
GUIDE BY INSULATION BARREL

CAM POSITIONS

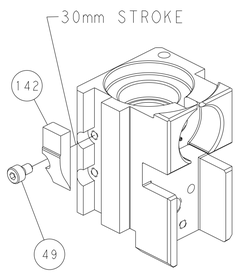

MECHANICAL
POST FEED

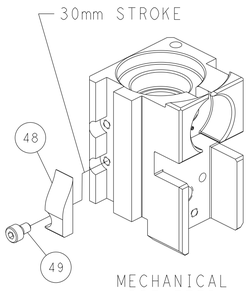

MECHANICAL
PRE FEED

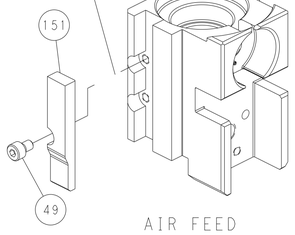

AIR FEED

PACIFIC VERSION

Shown on sheets 3 of 4 & 4 of 4
(Atlantic version shown on sheets 1 of 4 & 2 of 4)

THIS DRAWING IS A CONTROLLED DOCUMENT FOR TYCO ELECTRONICS CORPORATION IT IS SUBJECT TO CHANGE AND TEC CONTROLLING ENGINEERING ORGANIZATION SHOULD BE CONTACTED FOR THE LATEST REVISION

DIMENSIONS: mm

TOLERANCES UNLESS OTHERWISE SPECIFIED:
0 PLC ±-
1 PLC ±-
2 PLC ±-
3 PLC ±-
4 PLC ±-
ANGLES ±-

MATERIAL -
FINISH -

DWN B. WEAVER 24JAN2017
CHK T. ELBIN 24JAN2017
APVD T. ELBIN 24JAN2017
PRODUCT SPEC -
APPLICATION SPEC -
WEIGHT -

TE Connectivity
Harrisburg, PA 17105-3608

NAME Ocean Side Feed Applicator
-

SIZE	CAGE CODE	DRAWING NO	RESTRICTED TO
A1	00779	C-2836600	-

Customer Accessible Production Drawing | SCALE 1:2 | SHEET 4 OF 4 | REV D

SHEETS 1 & 2 ARE NOT REQUIRED FOR PACIFIC VERSION