THIS DRAWING IS UNPUBLISHED. RELEASED FOR PUBLICATION 20
© COPYRIGHT 20 BY TYCO ELECTRONICS CORPORATION. ALL RIGHTS RESERVED.

SET UP GAUGE 2119599-1	LOC	DIST
	A	66

REVISIONS

P	LTR	DESCRIPTION	DATE	DWN	APVD
	A	RELEASED	02APR2015	GH	GB
	B	ECR-17-004719	01APR2017	MZ	KZ
	C	ECR-17-008779	19JUN2017	MZ	KZ
	C1	ECR-18-008013	25MAY2018	LG	JD

ATLANTIC VERSION TERMINATOR INTERFACE ADAPTER

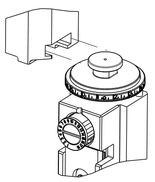

PART NUMBER	REVISION	DESCRIPTION	FEED TYPE	
~~2266709-1~~	~~C~~	~~FINE CRIMP HEIGHT ADJUST~~	~~MECHANICAL~~	SUPERSEDED BY 5-2151375-1
~~2266709-2~~	~~C~~	~~FINE CRIMP HEIGHT ADJUST~~	~~PNEUMATIC~~	SUPERSEDED BY 5-2151375-2
~~2266709-5~~	~~C~~	~~FINE CRIMP HEIGHT ADJUST~~	SERVO LATCH PLATE 4	OBSOLETE
~~2266709-6~~	~~C~~	~~NON-CRIMP HEIGHT ADJUST~~	SERVO 4 LATCH PLATE 12	OBSOLETE
~~2266709-7~~	~~C~~	~~FINE CRIMP HEIGHT ADJUST~~	~~NONE~~	OBSOLETE
7-2266709-7	B	CRIMP TOOLING KIT	-	

APPLICATOR DATA		
CRIMP	SIZE	TYPE
WIRE	1.40 mm [.055]	F
INSUL	1.91 mm [.075]	F
APPLICATOR INSTRUCTIONS 408-10389		

TERMINAL DATA: MOLEX TERMINAL		MOLEX CRIMP SPECIFICATION
TERMINAL NAME: PITCH MICRO - FIT 3.0 TERMINAL FEMALE 43030		
WIRE STRIP LENGTH 2.54-2.92 mm [.100-.115 IN]	INSULATION DIAMETER RANGE ∅1.30-1.85 mm [.051-.073 IN]	
TERMINAL APPLICATION SPECIFICATION	ATS-639004500 Rev F	- -
	-	- -

TERMINALS APPLIED

TE TERMINAL	MOLEX TERMINAL	TE TERMINAL	MOLEX TERMINAL
286747-1	43030-0003	286974-1	43031-0001
286747-2	43030-0002	286974-2	43031-0002
286747-3	43030-0001	286974-3	43031-0003
286747-4	43030-1001	286974-4	43031-0017
286747-5	43030-0051	286974-5	43031-0018
286747-6	43030-0052	286974-6	43031-0051
286747-7	43030-0053	286974-7	43031-0052
286747-8	45773-0001	286974-8	43031-0053
286747-9	45773-0002	286974-9	43031-0102
1-286747-0	45773-0003	1-286974-0	43031-0103
1-286747-1	45773-0053	1572840-2	44372-3606
1572840-1	44372-0002		

WIRE SIZE	CRIMP HEIGHT mm [INCH]	CRIMP HEIGHT REFERENCE SETTING 9
20 AWG OR 0.50mm2	0.95+/-0.04 [.037+/-.002]	7.2
22 AWG OR 0.35mm2	0.88+/-0.035 [.034+/-.001]	7.4
24 AWG OR 0.20mm2	0.81+/-0.025 [.032+/-.001]	8.5

TERMINAL DATA: ANDERSON TERMINAL		MOLEX CRIMP SPECIFICATION
TERMINAL NAME: PITCH MICRO - FIT 3.0 TERMINAL FEMALE 43030		
WIRE STRIP LENGTH 2.54-2.92 mm [.100-.115 IN]	INSULATION DIAMETER RANGE ∅1.30-1.85 mm [.051-.073 IN]	
TERMINAL APPLICATION SPECIFICATION	ATS-639004500 Rev F	- -
	-	- -

TERMINALS APPLIED

TE TERMINAL	ANDERSON TERMINAL	TE TERMINAL	ANDERSON TERMINAL
1-286747-2	4202G1	1-286974-1	4203G1
1-286747-3	4202G3	1-286974-2	4203G3

WIRE SIZE	CRIMP HEIGHT mm [INCH]	CRIMP HEIGHT REFERENCE SETTING 9
20 AWG OR 0.50mm2	0.95+/-0.04 [.037+/-.002]	7.2
22 AWG OR 0.35mm2	0.88+/-0.035 [.034+/-.001]	7.4
24 AWG OR 0.20mm2	0.81+/-0.025 [.032+/-.001]	8.5

*WARNING
ON INSTALLATION, SET WIRE DISC, ITEM 40 TO LARGEST WIRE SIZE SETTING. USE OF SETTINGS BELOW MINIMUM REQUIRED CRIMP HEIGHT SETTING WILL CAUSE DAMAGE TO CRIMP TOOLING.

1. RECOMMENDED SPARE PARTS
2. GREASE BEARING SURFACES LIGHTLY
3. LUBRICATE DAILY PER THE APPLICATOR INSTRUCTION SHEET SUPPLIED WITH THE APPLICATOR.
4. APPLICATOR SPECIFIC DATA TO BE ENTERED INTO BLANK MEMORY CHIP AT ASSEMBLY. SEE BELOW FOR PART NUMBER:
   MECHANICAL FEED WITH "SMART APPLICATOR" CONVERSION: 8-2266709-4
   PNEUMATIC FEED WITH "SMART APPLICATOR" CONVERSION: 8-2266709-4
   SERVO FEED WITH "FINE CRIMP HEIGHT ADJUST": 8-2266709-5
   SERVO FEED WITH "NON-CRIMP HEIGHT ADJUST": 8-2266709-6
5. ADJUSTMENT OF THE STRIPPER MAY BE REQUIRED WHEN MOVING THE APPLICATOR BETWEEN BENCH AND LEADMAKER APPLICATIONS.
6. APPLY PART NUMBER 1-23419-5 LOCTITE TO THREADS OF ITEM 62 & 180. APPLY PART NUMBER 2-23419-6 LOCTITE TO THREADS OF ITEM 242. FOR -6 ONLY APPLY PART NUMBER 1-23419-5 LOCTITE TO THREADS OF ITEM 37.
7. GREASE THREADS, GROOVE AND O-RING ON ITEMS 35 & 252.
8. MAGNET, ITEM 166 MUST BE ORIENTED CORRECTLY IN ORDER TO PROPERLY ACTUATE THE COUNTER.
9. CRIMP HEIGHT REFERENCE SETTING WAS THE SETTING USED WHEN THE APPLICATOR WAS QUALIFIED AT THE FACTORY. ADJUSTMENT MAY BE NECESSARY WHEN RUNNING APPLICATOR IN THE FIELD.
10. SPARE FEED CAM STORAGE LOCATION REFER TO INSTRUCTION SHEET FOR ADDITIONAL INFORMATION.
11. TO CONVERT THE APPLICATOR TO A NON-CARRIER CUTTING STYLE, REMOVE ITEM 13 AND ATTACH TO THE LOCATION ON THE BACK SIDE OF THE HOUSING. REFER TO INSTRUCTION SHEET FOR ADDITIONAL INFORMATION.
12. WHEN ASSEMBLING A NON CRIMP HEIGHT ADJUST APPLICATOR (-6) USE SHIMS FROM ITEM 260 TO ACHIEVE A NOMINAL SHIM HEIGHT OF 4.85.
13. THIS APPLICATOR IS SPECIFIC FOR USE IN A STRIPPER TERMINATING UNIT.

-	-	1	-	-	-	2119957-2	APPLICATOR SHIM PACK	260
-	1	-	1	1	1	8-21084-0	O-RING, .676 ID, .070 DIA. MAT.	252
-	-	-	-	1	-	2119640-1	PUSH ROD, AIR FEED	250
-	-	-	-	1	-	2079988-1	BUSHING, LCH5-12, MISUMI	249
-	-	-	-	1	-	2119641-1	FEED CAM, AIR FEED	248
-	1	-	1	1	1	2119798-1	DETENT PIN	247
-	1	-	1	1	1	1-22279-3	SPRING, COMPRESSION	246
-	-	1	-	-	-	2119758-1	RAM, AMP STYLE, SIDE FEED, NON-ADJ.	245
-	1	1	1	1	1	2119082-5	CAM, SNAIL, INSULATION ADJUSTMENT	244
-77	-7	-6	-5	-2	-1	PART NO	DESCRIPTION	ITEM NO

-	1	1	1	1	1	2079764-1	WASHER, WAVE SPRING, CREST-TO-CREST	243
-	1	1	1	1	1	2119083-1	RETAINER, INSULATION DIAL	242
-	1	1	1	1	1	7-18023-7	SCR, SKT HD CAP M3 X 4.0	241
-	-	2	2	-	-	2168400-6	SHCS, LOW HEAD, RoHS, M5 X 16	240
-	-	-	-	-	1	2119580-1	MECHANICAL FEED ASSEMBLY	239
-	-	-	-	1	-	2063440-1	AIR FEED MODULE	238
-	-	1	1	-	-	2119740-2	TAG,IDENTIFICATION	213
-	-	1	1	-	-	1901094-3	SPACER, FEEDER	198
-	1	1	1	1	1	4-1722335-3	STRIPPER, SIDE FEED	182
-	1	1	1	1	1	1-5018030-0	NUT, HEX, REG, RoHS, M3.5	181
-	1	1	1	1	1	1-1752354-6	STANDOFF,HOLD-DOWN	180
-	1	1	1	1	1	993111-1	PIN, SLOTTED SPRING 3.0 X 20.0	177
-	1	1	1	1	1	5-22280-0	SPRING, COMPRESSION	176
-	1	1	1	1	1	1752353-3	GUIDE PIN,HOLDDOWN	175
-	1	1	1	1	1	1901680-2	GUIDE PIN,HOLDDOWN	174
-	-	-	-	2	-	21045-3	RING, RETAIN, EXTERN, 3/16 CRESCENT	172
-	1	1	1	1	1	994969-1	MAGNET, RARE EARTH HIGH ENERGY	166
-	REF	REF	REF	REF	REF	994970-2	COUNTER, MAGNETIC	164
-	-	-	-	1	-	240638-1	SPRING, FEED FINGER	163
-	-	-	-	1	-	3-23627-7	PIN, RETAIN, GRVD, 3/16 X .854	137
-	-	-	-	1	-	2119799-1	HOLDER,FEED FINGER, AF	136
-	-	REF	REF	-	-	SEE NOTE 4	MEMORY CHIP, PROGRAMMED	135
-	-	1	1	-	-	1633743-1	SERVO FEED LATCH ASM	133
-	-	REF	REF	-	-	2119944-1	FEED FINGER ASSEMBLY,SF	117
-	1	1	1	1	1	455888-6	SPACER, CRIMPER	82
-	1	1	1	1	1	5-547505-2	SPRING, COMPRESSION	77
-	1	1	1	1	1	854769-2	HOLDER, INS	74
-	1	1	1	1	1	2119956-1	DOCUMENTATION PACKAGE	71
-	1	-	-	1	1	2119740-1	TAG,IDENTIFICATION	67
-	2	2	2	2	2	2168078-1	SCREW, DRIVE, RH, RoHS, 2 x .188	66
-	1	-	1	1	1	2119793-1	LIMITER, ADJUSTMENT BOLT	63
-	3	-	3	3	3	992763-5	SCR, SET, SOC, CONE PNT, M3 x 4.0	62
-	1	1	1	1	1	2079383-4	SCR, BHSC, RoHS (M4 X 8)	60
-	-	-	-	1	1	5-18022-5	SCR, HEX HD CAP, M4 X 6.0	59
-	1	1	1	1	1	21028-2	PIN, SLOTTED SPRING .062 X .250	58
-	-	-	-	1	1	1338685-1	PAWL, FEED	56
-	4	4	4	4	4	2168400-1	SHCS, LOW HEAD, RoHS, M4 X 12	54
-	2	2	2	2	2	2168083-3	SCR, SKT HD CAP, RoHS, M4 X 12.0	53
-	1	1	1	1	1	5018030-1	NUT, HEX, REG, RoHS, M3	52
-	1	1	1	1	1	811242-5	BUMPER, HOLD DOWN	51
-	1	1	1	1	1	690753-2	SPACER, TONKER	50
-	-	-	-	1	2	18023-9	SCR, SKT HD CAP M4 X 6.0	49
-	-	-	-	-	1	2119652-1	FEED CAM, PRE FEED	48
-	-	-	-	-	1	2119653-1	FEED CAM, POST FEED	47
-	1	1	1	1	1	2-2119656-1	APPLICATOR BASIC ASSEMBLY, SF	46
-	1	-	1	1	1	2119370-1	RAM, AMP STYLE, SIDE FEED	44
-	1	1	1	1	1	2079383-7	SCR, BHSC, RoHS (M8 X 25)	41
-	1	-	1	1	1	2119645-1	DISC, NUMBERED FA WIRE ADJUSTMENT	40
-	1	-	1	1	1	2119957-1	APPLICATOR SHIM PACK	39
-	1	1	1	1	1	2119644-1	RAM WASHER, PRECISION	38
-	1	1	1	1	1	2119085-1	FA HEAD, ATLANTIC STYLE	37
-	1	-	1	1	1	2119092-1	BOLT, ADJUSTMENT	35
-	1	1	1	1	1	1752356-6	SUPPORT, TERMINAL	34
-	2	2	2	2	2	2079383-5	SCR, BHSC, RoHS (M4 X 20)	33
-	1	1	1	1	1	2161328-1	HEX HEAD, FLANGED, M5 x 8mm LONG	32
-	1	1	1	1	1	1320908-6	SPACER, STRIP GUIDE	30
-	1	1	1	1	1	2119959-1	ASSEMBLY, STRIP GUIDE	29
-	1	1	1	1	1	455888-8	SPACER, CRIMPER	28
-	1	1	1	1	1	1320928-2	STRIP GUIDE	24
-	1	1	1	1	1	1-18028-2	WASHER, FLAT, REG M4	20
-	1	1	1	1	1	2119806-1	INSERT, SHEAR	13
-	1	1	1	1	1	3-22280-3	SPRING, COMPRESSION	12
-	1	1	1	1	1	1-356885-4	STOP, SHEAR	11
-	1	1	1	1	1	2119805-1	SHEAR HOLDER, FRONT	10
-	1	1	1	1	1	1803095-1	FLOATING SHEAR, FRONT -	9
1	1	1	1	1	1	7-1333201-3	ANVIL, COMBINATION	8
-	-	-	-	-	-	-	-	7
-	-	-	-	-	-	-	-	6
-	1	1	1	1	1	2119780-9	DEPRESSOR, SHEAR	5
-	1	1	1	1	1	2-238011-3	BLOCK, CRIMPER SPACER	4
1	1	1	1	1	1	1803223-9	CRIMPER, INSULATION F PREMIUM	3
-	-	-	-	-	-	-	-	2
1	1	1	1	1	1	1-456402-0	CRIMPER, WIRE PREMIUM	1
-77	-7	-6	-5	-2	-1	PART NO	DESCRIPTION	ITEM NO

ATLANTIC VERSION

Shown on sheets 1 of 4 & 2 of 4
(Pacific version shown on sheets 3 of 4 & 4 of 4)

THIS DRAWING IS A CONTROLLED DOCUMENT FOR TYCO ELECTRONICS CORPORATION. IT IS SUBJECT TO CHANGE AND THE CONTROLLING ENGINEERING ORGANIZATION SHOULD BE CONTACTED FOR THE LATEST REVISION.

DWN	HOFFNER	11MAR2015
CHK	T.ELBIN	12MAR2015
APVD	T.ELBIN	12MAR2015

DIMENSIONS: mm

TOLERANCES UNLESS OTHERWISE SPECIFIED:
0 PLC ±-
1 PLC ±-
2 PLC ±-
3 PLC ±-
4 PLC ±-
ANGLES ±-

MATERIAL - -
FINISH - -

PRODUCT SPEC -
APPLICATION SPEC -
WEIGHT -

TE Connectivity
Harrisburg, PA 17105-3608

NAME: Ocean Side Feed Applicator -

SIZE	CAGE CODE	DRAWING NO	RESTRICTED TO
A1	00779	C-2266709	-

Customer Accessible Production Drawing | SCALE 1:2 | SHEET 1 OF 4 | REV C1

AMP 4805 REV 31MAR2000

SHEETS 3 & 4 ARE NOT REQUIRED FOR ATLANTIC VERSION

THIS DRAWING IS UNPUBLISHED. RELEASED FOR PUBLICATION 20
© COPYRIGHT 20 BY TYCO ELECTRONICS CORPORATION. ALL RIGHTS RESERVED.

LOC	DIST
A	66

REVISIONS

P	LTR	DESCRIPTION	DATE	DWN	APVD
	-	SEE SHEET 1	-	-	-

FEED TYPE MECHANICAL

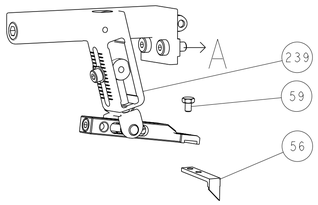

PNEUMATIC

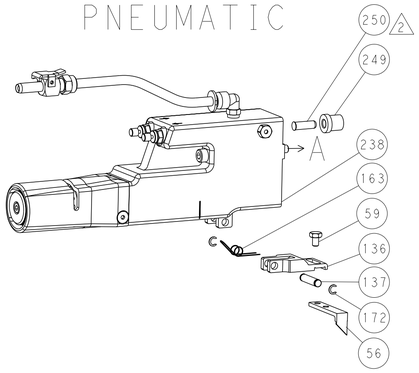

SERVO LATCH PLATE

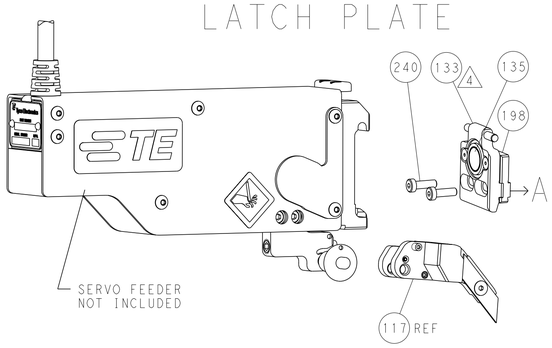

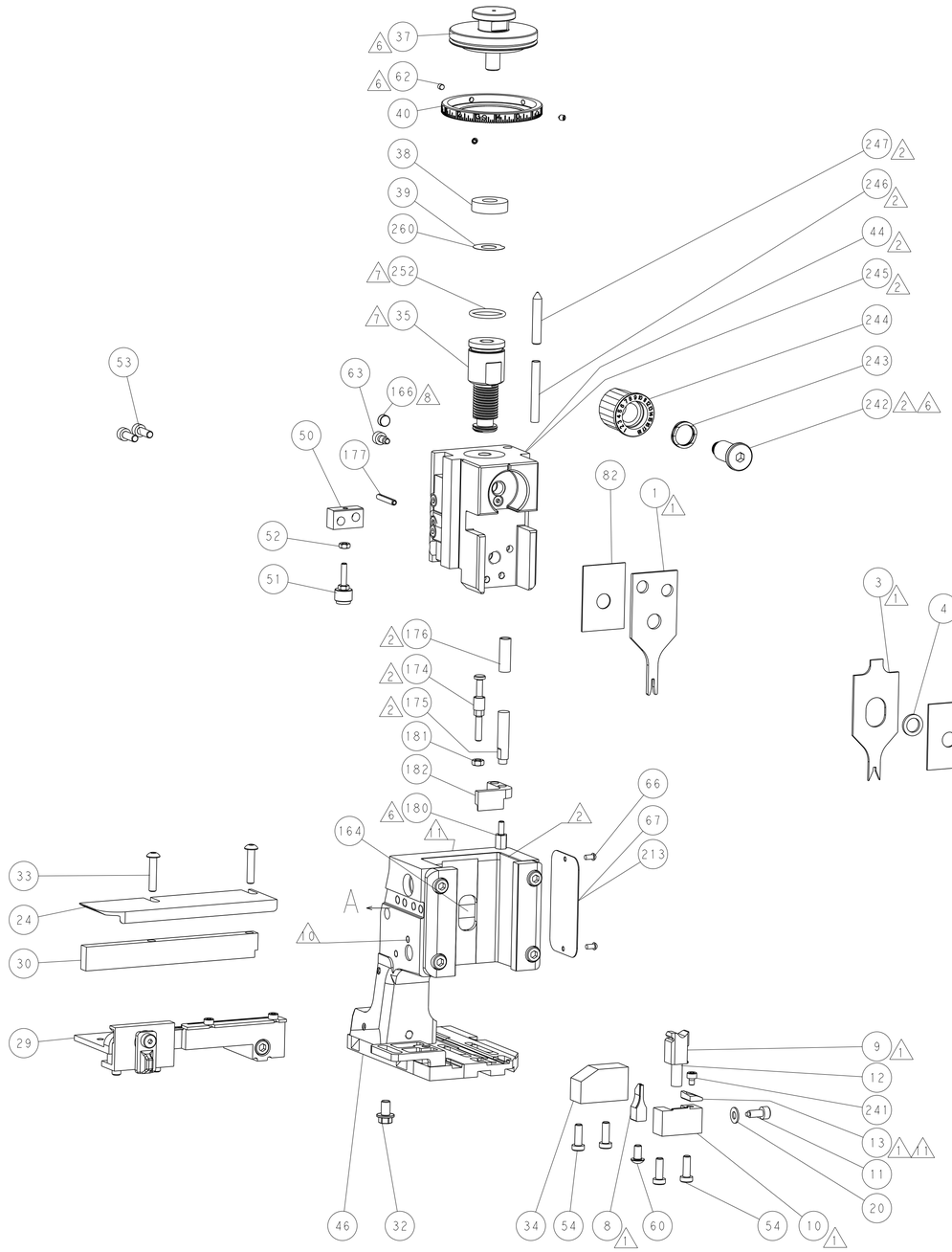

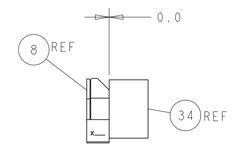

TERMINAL SUPPORT LOCATION

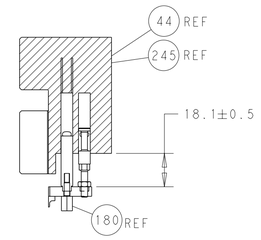

HOLDDOWN SET-UP

ITEM 30 LOCATED AT FRONT HOLES

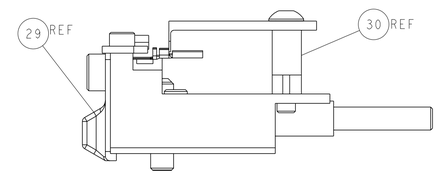

FEED TRACK POSITION GUIDE BY WIRE BARREL

CAM POSITIONS

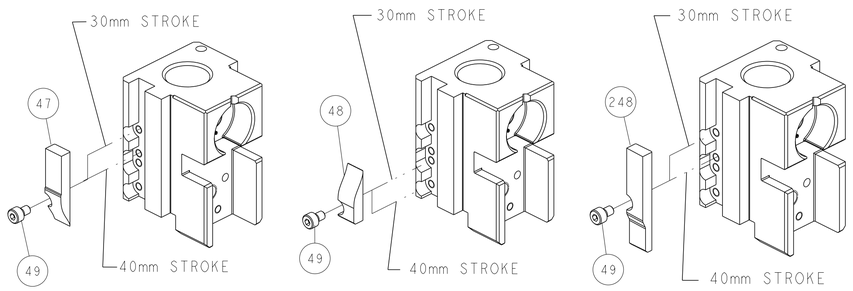

MECHANICAL POST FEED

MECHANICAL PRE FEED

AIR FEED

ATLANTIC VERSION

Shown on sheets 1 of 4 & 2 of 4
(Pacific version shown on sheets 3 of 4 & 4 of 4)

THIS DRAWING IS A CONTROLLED DOCUMENT FOR TYCO ELECTRONICS CORPORATION. IT IS SUBJECT TO CHANGE AND THE CONTROLLING ENGINEERING ORGANIZATION SHOULD BE CONTACTED FOR THE LATEST REVISION.

DWN	HOFFNER	11MAR2015
CHK	T.ELBIN	12MAR2015
APVD	T.ELBIN	12MAR2015
PRODUCT SPEC	-	
APPLICATION SPEC	-	
WEIGHT	-	

DIMENSIONS: mm

TOLERANCES UNLESS OTHERWISE SPECIFIED:
0 PLC ±-
1 PLC ±-
2 PLC ±-
3 PLC ±-
4 PLC ±-
ANGLES ±-

MATERIAL - -
FINISH - -

TE Connectivity
Harrisburg, PA 17105-3608

NAME: Ocean Side Feed Applicator -

SIZE	CAGE CODE	DRAWING NO	RESTRICTED TO
A1	00779	C-2266709	-

Customer Accessible Production Drawing | SCALE 1:2 | SHEET 2 OF 4 | REV C1

SHEETS 3 & 4 ARE NOT REQUIRED FOR ATLANTIC VERSION

THIS DRAWING IS UNPUBLISHED. RELEASED FOR PUBLICATION 20
© COPYRIGHT 20 BY TYCO ELECTRONICS CORPORATION. ALL RIGHTS RESERVED.

SET UP GAUGE	LOC	DIST
2119599-1	A	66

REVISIONS

P	LTR	DESCRIPTION	DATE	DWN	APVD
	-	SEE SHEET 1	-	-	-

PACIFIC VERSION TERMINATOR INTERFACE ADAPTER	PART NUMBER	REVISION	DESCRIPTION	FEED TYPE	
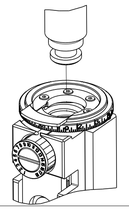	~~2-2266709-1~~	~~C~~	~~FINE CRIMP HEIGHT ADJUST~~	~~MECHANICAL~~	OBSOLETE
	~~2-2266709-2~~	~~C~~	~~FINE CRIMP HEIGHT ADJUST~~	~~PNEUMATIC~~	OBSOLETE
	~~2-2266709-5~~	~~C~~	~~FINE CRIMP HEIGHT ADJUST~~	SERVO LATCH PLATE 4	OBSOLETE
	~~2-2266709-7~~	~~C~~	~~FINE CRIMP HEIGHT ADJUST~~	~~NONE~~	OBSOLETE
	7-2266709-7	B	CRIMP TOOLING KIT	-	

APPLICATOR DATA		
CRIMP	SIZE	TYPE
WIRE	1.40 mm [.055]	F
INSUL	1.91 mm [.075]	F
APPLICATOR INSTRUCTIONS 408-10389		

TERMINAL DATA: MOLEX TERMINAL	MOLEX CRIMP SPECIFICATION
TERMINAL NAME: PITCH MICRO - FIT 3.0 TERMINAL FEMALE 43030	
WIRE STRIP LENGTH 2.54-2.92 mm [.100-.115 IN]	INSULATION DIAMETER RANGE ∅1.30-1.85 mm [.051-.073 IN]
TERMINAL APPLICATION SPECIFICATION ATS-639004500 Rev F	- -
- -	- -

TERMINALS APPLIED

TE TERMINAL	MOLEX TERMINAL	TE TERMINAL	MOLEX TERMINAL
286747-1	43030-0003	286974-1	43031-0001
286747-2	43030-0002	286974-2	43031-0002
286747-3	43030-0001	286974-3	43031-0003
286747-4	43030-1001	286974-4	43031-0017
286747-5	43030-0051	286974-5	43031-0018
286747-6	43030-0052	286974-6	43031-0051
286747-7	43030-0053	286974-7	43031-0052
286747-8	45773-0001	286974-8	43031-0053
286747-9	45773-0002	286974-9	43031-0102
1-286747-0	45773-0003	1-286974-0	43031-0103
1-286747-1	45773-0053	1572840-2	44372-3606
1572840-1	44372-0002		

TERMINAL DATA: ANDERSON TERMINAL	MOLEX CRIMP SPECIFICATION
TERMINAL NAME: PITCH MICRO - FIT 3.0 TERMINAL FEMALE 43030	
WIRE STRIP LENGTH 2.54-2.92 mm [.100-.115 IN]	INSULATION DIAMETER RANGE ∅1.30-1.85 mm [.051-.073 IN]
TERMINAL APPLICATION SPECIFICATION ATS-639004500 Rev F	- -
- -	- -

TERMINALS APPLIED

TE TERMINAL	ANDERSON TERMINAL	TE TERMINAL	ANDERSON TERMINAL
1-286747-2	4202G1	1-286974-1	4203G1
1-286747-3	4202G3	1-286974-2	4203G3

WIRE SIZE	CRIMP HEIGHT mm [INCH]	CRIMP HEIGHT REFERENCE SETTING 9
20 AWG OR 0.50mm2	0.95+/-0.04 [.037+/-.002]	7.2
22 AWG OR 0.35mm2	0.88+/-0.035 [.034+/-.001]	7.4
24 AWG OR 0.20mm2	0.81+/-0.025 [.032+/-.001]	8.5

WIRE SIZE	CRIMP HEIGHT mm [INCH]	CRIMP HEIGHT REFERENCE SETTING 9
20 AWG OR 0.50mm2	0.95+/-0.04 [.037+/-.002]	7.2
22 AWG OR 0.35mm2	0.88+/-0.035 [.034+/-.001]	7.4
24 AWG OR 0.20mm2	0.81+/-0.025 [.032+/-.001]	8.5

*WARNING
ON INSTALLATION, SET WIRE DISC, ITEM 40 TO LARGEST WIRE SIZE SETTING. USE OF SETTINGS BELOW MINIMUM REQUIRED CRIMP HEIGHT SETTING WILL CAUSE DAMAGE TO CRIMP TOOLING.

1. RECOMMENDED SPARE PARTS
2. GREASE BEARING SURFACES LIGHTLY
3. LUBRICATE DAILY PER THE APPLICATOR INSTRUCTION SHEET SUPPLIED WITH THE APPLICATOR.
4. APPLICATOR SPECIFIC DATA TO BE ENTERED INTO BLANK MEMORY CHIP AT ASSEMBLY. SEE BELOW FOR PART NUMBER:
   MECHANICAL FEED WITH "SMART APPLICATOR" CONVERSION: 8-2266709-4
   PNEUMATIC FEED WITH "SMART APPLICATOR" CONVERSION: 8-2266709-4
   SERVO FEED WITH "FINE CRIMP HEIGHT ADJUST": 8-2266709-5
5. ADJUSTMENT OF THE STRIPPER MAY BE REQUIRED WHEN MOVING THE APPLICATOR BETWEEN BENCH AND LEADMAKER APPLICATIONS.
6. APPLY PART NUMBER 1-23419-5 LOCTITE TO THREADS OF ITEM 62 & 180. APPLY PART NUMBER 2-23419-6 LOCTITE TO THREADS OF ITEM 242.
7. GREASE THREADS, GROOVE AND O-RING ON ITEMS 139 & 152.
8. MAGNET MUST BE ORIENTED CORRECTLY IN ORDER TO PROPERLY ACTUATE THE COUNTER.
9. CRIMP HEIGHT REFERENCE SETTING WAS THE SETTING USED WHEN THE APPLICATOR WAS QUALIFIED AT THE FACTORY. ADJUSTMENT MAY BE NECESSARY WHEN RUNNING APPLICATOR IN THE FIELD.
10. SPARE FEED CAM STORAGE LOCATION REFER TO INSTRUCTION SHEET FOR ADDITIONAL INFORMATION.
11. TO CONVERT THE APPLICATOR TO A NON-CARRIER CUTTING STYLE, REMOVE ITEM 13 AND ATTACH TO THE LOCATION ON BACK SIDE OF THE HOUSING. REFER TO INSTRUCTION SHEET FOR ADDITIONAL INFORMATION.
12. THIS APPLICATOR IS SPECIFIC FOR USE IN A STRIPPER SEAL TERMINATING UNIT.

-77	-27	-25	-22	-21	PART NO	DESCRIPTION	ITEM NO
-	1	1	1	1	2119782-1	FINE ADJUST HEAD ASM, PACIFIC STYLE	251
-	-	-	1	-	2119640-1	PUSH ROD, AIR FEED	250
-	-	-	1	-	2079988-1	BUSHING, LCH5-12, MISUMI	249
-	1	1	1	1	1-22279-3	SPRING, COMPRESSION	246
-	1	1	1	1	2119082-5	CAM, SNAIL, INSULATION ADJUSTMENT	244
-	1	1	1	1	2079764-1	WASHER, WAVE SPRING, CREST-TO-CREST	243
6 -	1	1	1	1	2119083-1	RETAINER, INSULATION DIAL	242
-77	-27	-25	-22	-21	PART NO	DESCRIPTION	ITEM NO

-77	-27	-25	-22	-21	PART NO	DESCRIPTION	ITEM NO
-	1	1	1	1	7-18023-7	SCR, SKT HD CAP M3 X 4.0	241
-	-	2	-	-	2168400-6	SHCS, LOW HEAD, RoHS, M5 X 16	240
-	-	-	-	1	2119580-1	MECHANICAL FEED ASSEMBLY	239
-	-	-	1	-	2063440-1	AIR FEED MODULE	238
-	-	1	-	-	2119740-2	TAG,IDENTIFICATION	213
-	-	1	-	-	1901094-3	SPACER, FEEDER	198
-	1	1	1	1	4-1722335-3	STRIPPER, SIDE FEED	182
-	1	1	1	1	1-5018030-0	NUT, HEX, REG, RoHS, M3.5	181
6 -	1	1	1	1	1-1752354-6	STANDOFF,HOLD-DOWN	180
-	1	1	1	1	993111-1	PIN, SLOTTED SPRING 3.0 X 20.0	177
-	1	1	1	1	5-22280-0	SPRING, COMPRESSION	176
-	1	1	1	1	1752353-3	GUIDE PIN,HOLDDOWN	175
-	1	1	1	1	1901680-2	GUIDE PIN,HOLDDOWN	174
-	-	-	2	-	21045-3	RING, RETAIN, EXTERN, 3/16 CRESCENT	172
-	1	1	1	1	994969-1	MAGNET, RARE EARTH HIGH ENERGY	166
-	REF	REF	REF	REF	994970-2	COUNTER, MAGNETIC	164
-	-	-	1	-	240638-1	SPRING, FEED FINGER	163
-	1	1	1	1	8-21084-1	O-RING, .801 ID, .070 DIA. MAT.	152
-	-	-	1	-	2119641-2	FEED CAM, AIR FEED	151
-	1	1	1	1	2119798-2	DETENT PIN	145
-	1	1	1	1	2079383-8	SCR, BHSC, RoHS (M4 X 16)	144
-	4	4	4	4	2168400-5	SHCS, LOW HEAD, RoHS, M4 X 20	143
-	-	-	-	1	2119653-2	FEED CAM, POST FEED	142
-	1	1	1	1	2-2119656-2	APPLICATOR BASIC ASSEMBLY, SF	141
-	1	1	1	1	2119650-1	RAM, ASIAN STYLE, SIDE FEED	140
-	1	1	1	1	2119092-2	BOLT, ADJUSTMENT	139
-	-	-	1	-	3-23627-7	PIN, RETAIN, GRVD, 3/16 X .854	137
-	-	-	1	-	2119799-1	HOLDER,FEED FINGER, AF	136
-	-	REF	-	-	SEE NOTE 4	MEMORY CHIP, PROGRAMMED	135
-	-	1	-	-	1633743-1	SERVO FEED LATCH ASM	133
-	-	REF	-	-	2119944-1	FEED FINGER ASSEMBLY,SF	117
-	1	1	1	1	455888-6	SPACER, CRIMPER	82
-	1	1	1	1	5-547505-2	SPRING, COMPRESSION	77
-	1	1	1	1	854769-2	HOLDER, INS	74
-	1	1	1	1	2119956-1	DOCUMENTATION PACKAGE	71
-	1	-	1	1	2119740-1	TAG,IDENTIFICATION	67
-	2	2	2	2	2168078-1	SCREW, DRIVE, RH, RoHS, 2 x .188	66
-	1	1	1	1	2119793-1	LIMITER, ADJUSTMENT BOLT	63
6 -	3	3	3	3	992763-5	SCR, SET, SOC, CONE PNT, M3 x 4.0	62
-	-	-	1	1	5-18022-5	SCR, HEX HD CAP, M4 X 6.0	59
-	1	1	1	1	21028-2	PIN, SLOTTED SPRING .062 X .250	58
-	-	-	1	1	1338685-1	PAWL, FEED	56
-	2	2	2	2	2168083-3	SCR, SKT HD CAP, RoHS, M4 X 12.0	53
-	1	1	1	1	5018030-1	NUT, HEX, REG, RoHS, M3	52
-	1	1	1	1	811242-5	BUMPER, HOLD DOWN	51
-	1	1	1	1	690753-2	SPACER, TONKER	50
-	-	-	1	2	18023-9	SCR, SKT HD CAP M4 X 6.0	49
-	-	-	-	1	2119652-1	FEED CAM, PRE FEED	48
-	1	1	1	1	2079383-7	SCR, BHSC, RoHS (M8 X 25)	41
-	1	1	1	1	2119645-1	DISC, NUMBERED FA WIRE ADJUSTMENT	40
-	1	1	1	1	2119957-1	APPLICATOR SHIM PACK	39
-	1	1	1	1	2119644-1	RAM WASHER, PRECISION	38
-	1	1	1	1	1752356-6	SUPPORT, TERMINAL	34
-	2	2	2	2	2079383-5	SCR, BHSC, RoHS (M4 X 20)	33
-	1	1	1	1	2161328-1	HEX HEAD, FLANGED, M5 x 8mm LONG	32
-	1	1	1	1	1320908-6	SPACER, STRIP GUIDE	30
-	1	1	1	1	2119959-1	ASSEMBLY, STRIP GUIDE	29
-	1	1	1	1	455888-8	SPACER, CRIMPER	28
-	1	1	1	1	1320928-2	STRIP GUIDE	24
-	1	1	1	1	1-18028-2	WASHER, FLAT, REG M4	20
1 -	1	1	1	1	2119806-1	INSERT, SHEAR	13
-	1	1	1	1	3-22280-3	SPRING, COMPRESSION	12
-	1	1	1	1	1-356885-4	STOP, SHEAR	11
1 -	1	1	1	1	2119805-1	SHEAR HOLDER, FRONT	10
1 -	1	1	1	1	1803095-1	FLOATING SHEAR, FRONT -	9
1 1	1	1	1	1	7-1333201-3	ANVIL, COMBINATION	8
-	-	-	-	-	-	-	7
-	-	-	-	-	-	-	6
-	1	1	1	1	2119780-9	DEPRESSOR, SHEAR	5
-	1	1	1	1	2-238011-3	BLOCK, CRIMPER SPACER	4
1 1	1	1	1	1	1803223-9	CRIMPER, INSULATION F PREMIUM	3
-	-	-	-	-	-	-	2
1 1	1	1	1	1	1-456402-0	CRIMPER, WIRE PREMIUM	1
-77	-27	-25	-22	-21	PART NO	DESCRIPTION	ITEM NO

PACIFIC VERSION

Shown on sheets 3 of 4 & 4 of 4
(Atlantic version shown on sheets 1 of 4 & 2 of 4)

THIS DRAWING IS A CONTROLLED DOCUMENT FOR TYCO ELECTRONICS CORPORATION. IT IS SUBJECT TO CHANGE AND THE CONTROLLING ENGINEERING ORGANIZATION SHOULD BE CONTACTED FOR THE LATEST REVISION.

DIMENSIONS: mm
TOLERANCES UNLESS OTHERWISE SPECIFIED: 0 PLC ±- ; 1 PLC ±- ; 2 PLC ±- ; 3 PLC ±- ; 4 PLC ±- ; ANGLES ±-
MATERIAL - -
FINISH - -

DWN	HOFFNER	11MAR2015
CHK	T.ELBIN	12MAR2015
APVD	T.ELBIN	12MAR2015
PRODUCT SPEC	-	
APPLICATION SPEC	-	
WEIGHT	-	

TE Connectivity
Harrisburg, PA 17105-3608

NAME: Ocean Side Feed Applicator -

SIZE	CAGE CODE	DRAWING NO	RESTRICTED TO
A1	00779	C-2266709	-

Customer Accessible Production Drawing | SCALE 1:2 | SHEET 3 OF 4 | REV C1

SHEETS 1 & 2 ARE NOT REQUIRED FOR PACIFIC VERSION

THIS DRAWING IS UNPUBLISHED. RELEASED FOR PUBLICATION 20
© COPYRIGHT 20 BY TYCO ELECTRONICS CORPORATION. ALL RIGHTS RESERVED.

LOC	DIST
A	66

REVISIONS

P	LTR	DESCRIPTION	DATE	DWN	APVD
	-	SEE SHEET 1	-	-	-

FEED TYPE MECHANICAL

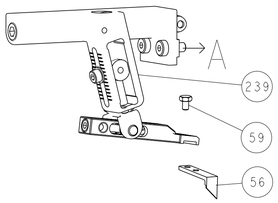

PNEUMATIC

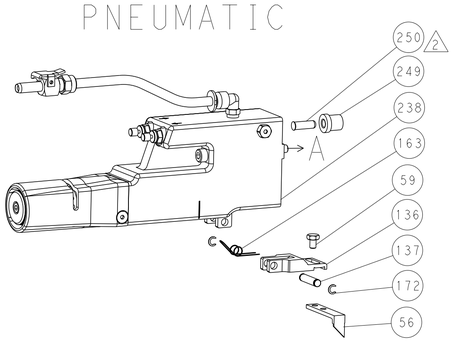

SERVO LATCH PLATE

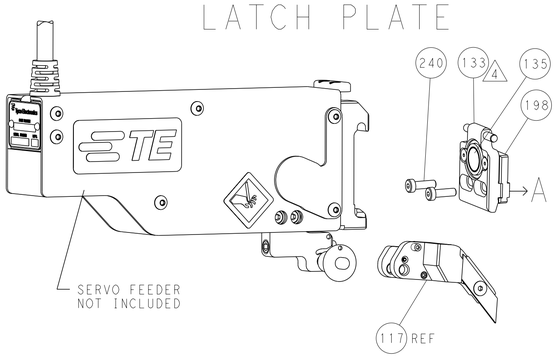

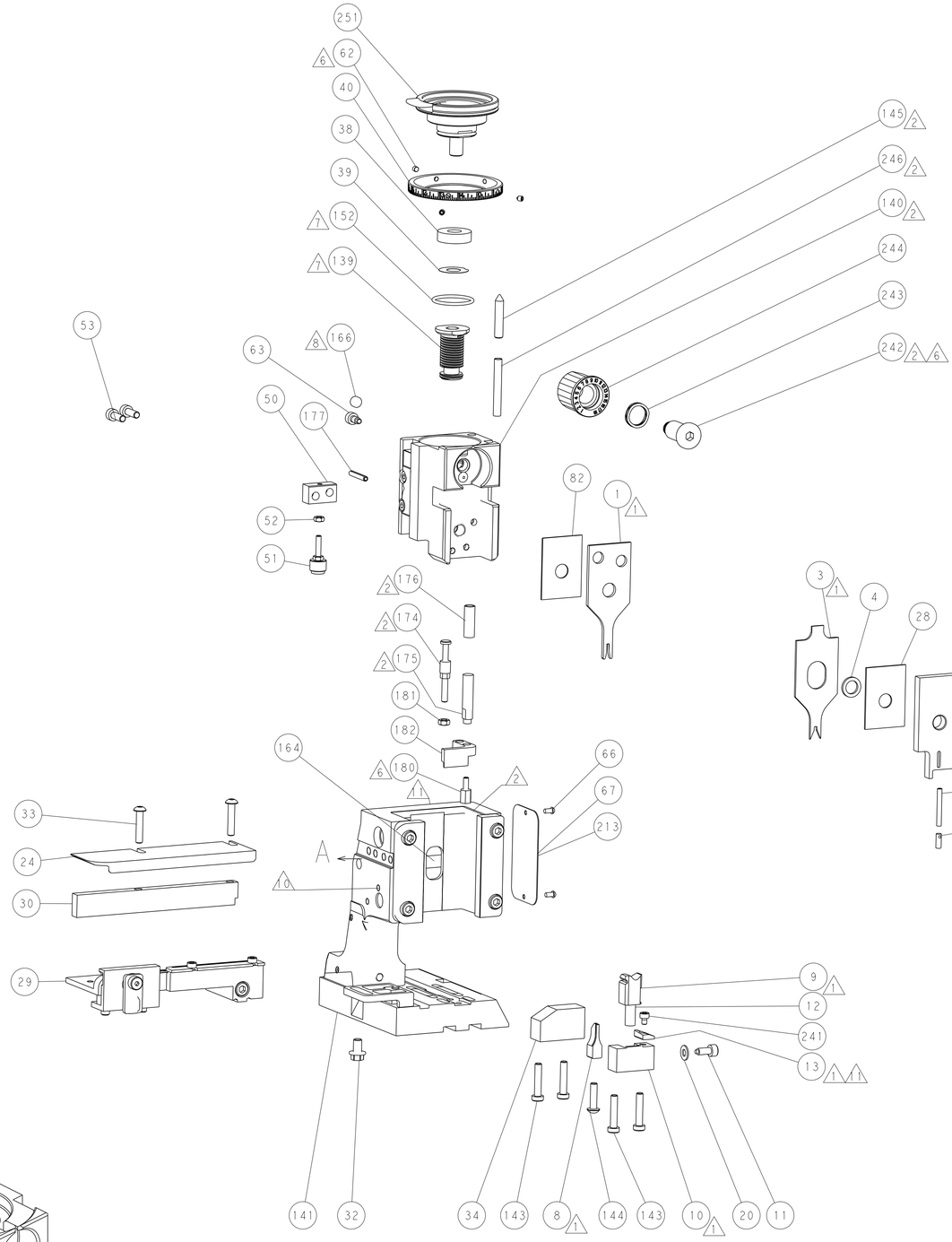

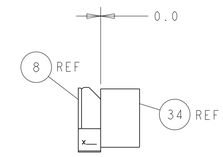

TERMINAL SUPPORT LOCATION

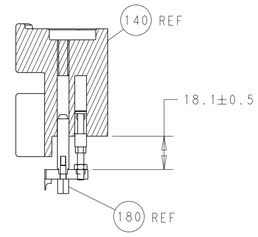

HOLDDOWN SET-UP

ITEM 30 LOCATED AT FRONT HOLES

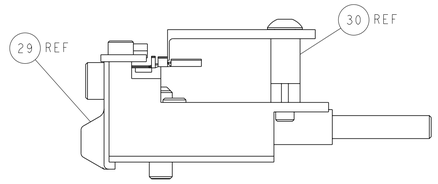

FEED TRACK POSITION
GUIDE BY WIRE BARREL

CAM POSITIONS

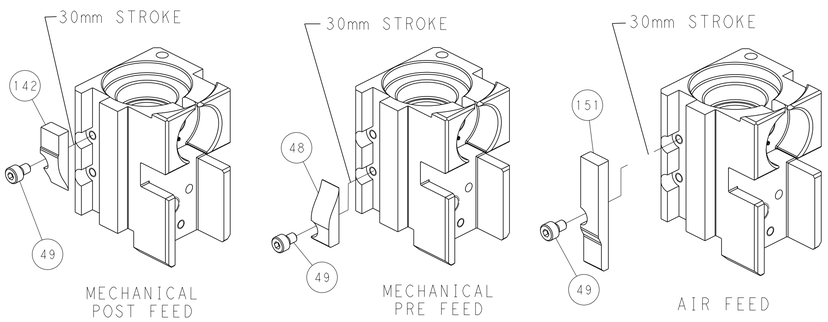

MECHANICAL POST FEED

MECHANICAL PRE FEED

AIR FEED

PACIFIC VERSION

Shown on sheets 3 of 4 & 4 of 4
(Atlantic version shown on sheets 1 of 4 & 2 of 4)

THIS DRAWING IS A CONTROLLED DOCUMENT FOR TYCO ELECTRONICS CORPORATION. IT IS SUBJECT TO CHANGE AND THE CONTROLLING ENGINEERING ORGANIZATION SHOULD BE CONTACTED FOR THE LATEST REVISION.

DIMENSIONS: mm

TOLERANCES UNLESS OTHERWISE SPECIFIED:
0 PLC ±-
1 PLC ±-
2 PLC ±-
3 PLC ±-
4 PLC ±-
ANGLES ±-

MATERIAL - - -
FINISH - - -

DWN	HOFFNER	11MAR2015
CHK	T.ELBIN	12MAR2015
APVD	T.ELBIN	12MAR2015
PRODUCT SPEC	-	
APPLICATION SPEC	-	
WEIGHT	-	

TE Connectivity
Harrisburg, PA 17105-3608

NAME: Ocean Side Feed Applicator -

SIZE	CAGE CODE	DRAWING NO	RESTRICTED TO
A1	00779	C-2266709	-

Customer Accessible Production Drawing | SCALE 1:2 | SHEET 4 OF 4 | REV C1

AMP 4805 REV 31MAR2000

SHEETS 1 & 2 ARE NOT REQUIRED FOR PACIFIC VERSION