THIS DRAWING IS UNPUBLISHED. RELEASED FOR PUBLICATION 2019
© COPYRIGHT 2019 BY TYCO ELECTRONICS CORPORATION. ALL RIGHTS RESERVED.

LOC	DIST
A	66

REVISIONS

P	LTR	DESCRIPTION	DATE	DWN	APVD
	1	PRELIMINARY	16APR2019	MEH	TE
	A	RELEASED	15JUL2019	TB	TE

PART NUMBER	REVISION	DESCRIPTION	FEED TYPE
2150982-1	A	FINE CRIMP HEIGHT ADJUST	MECHANICAL
2150982-2	A	FINE CRIMP HEIGHT ADJUST	PNEUMATIC
7-2150982-1	A	MECHANICAL AND CRIMP TOOLING KIT	MECHANICAL
7-2150982-2	A	PNEUMATIC AND CRIMP TOOLING KIT	PNEUMATIC
7-2150982-7	A	CRIMP TOOLING KIT	-

ATLANTIC VERSION TERMINATOR INTERFACE ADAPTER

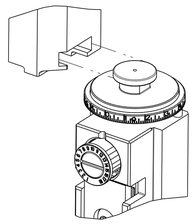

APPLICATOR DATA		
CRIMP	SIZE	TYPE
WIRE	2.29 mm [.090]	F
INSUL	2.80 mm [.110]	O
APPL INSTRUCTIONS 408-35043		

TERMINAL DATA: TE TERMINAL		UTILUX CRIMP SPECIFICATION
TERMINAL NAME: RECEPTACLE, FLAG QC 6.3		
WIRE STRIP LENGTH 4.87-5.13 mm [.192-.202 IN]		INSULATION DIAMETER RANGE ∅2.20-2.50 mm [.087-.098 IN]
TERMINAL APPLICATION SPECIFICATION	H 2591 Rev 2	- -
	-	- -

TERMINALS APPLIED 6

TE TERMINAL	TE TERMINAL	TE TERMINAL	TE TERMINAL
1-1627100-1	1-1627100-2		

WIRE SIZE	CRIMP HEIGHT mm [INCH]	CRIMP HEIGHT REFERENCE SETTING 4
1.00mm2	1.55+/-0.025 [.061+/-.001]	6.7
0.75mm2	1.50+/-0.025 [.059+/-.001]	7.2
0.50mm2	1.45+/-0.025 [.057+/-.001]	7.7

1. RECOMMENDED SPARE PARTS
2. REFER TO SUPPLIED INSTRUCTION SHEET FOR CLEANING, LUBRICATION AND STORAGE OF APPLICATOR.
3. APPLY PART NUMBER 2-23419-6 LOCTITE TO THREADS OF ITEM 242.
4. CRIMP HEIGHT REFERENCE SETTING WAS THE SETTING USED WHEN THE APPLICATOR WAS QUALIFIED AT THE FACTORY. ADJUSTMENT MAY BE NECESSARY WHEN RUNNING APPLICATOR IN THE FIELD.
5. UNLESS SPECIFIED OTHERWISE TORQUE VALUES SHALL BE USED PER DOCUMENT, 101-35000.
6. TERMINAL LUBRICANT IS RECOMMENDED.
7. RECOMMENDED TO RUN SPLIT CYCLE MODE ON TERMINATING UNIT.

*WARNING
ON INSTALLATION, SET WIRE DISC TO CRIMP HEIGHT REFERENCE SETTING FOR LARGEST WIRE SIZE. CRIMP HEIGHT REFERENCE SETTINGS GREATER THAN THE VALUE SHOWN MAY CAUSE DAMAGE TO THE CRIMP TOOLING, REFER TO THE INSTRUCTION SHEET FOR PROPER SETUP AND ADJUSTMENTS.

-	1	1	1	1	2168083-3	SCR, SKT HD CAP, RoHS, M4 X 12.0	288
-	1	1	1	1	2119534-1	MOUNT, STRIPPER, SIDE FEED	287
-	1	-	1	-	2119640-1	PUSH ROD, AIR FEED	250
-	1	-	1	-	1803259-1	BUSHING, FLANGED	249
-	1	-	1	-	2119641-1	FEED CAM, AIR FEED	248
-	1	1	1	1	2119082-4	CAM, SNAIL, INSULATION ADJUSTMENT	244
-	1	1	1	1	2079764-1	WASHER, WAVE SPRING, CREST-TO-CREST	243
3 -	1	1	1	1	2119083-1	RETAINER, INSULATION DIAL	242
-	-	1	-	1	2119580-1	MECHANICAL FEED ASSEMBLY	239
-	1	-	1	-	2063440-1	AIR FEED MODULE	238
-	1	1	1	1	1-18028-0	WASHER, FLAT, REG M8	192
-	2	-	2	-	21045-3	RING, RETAIN, EXTERN, 3/16 CRESCENT	172
-	REF	REF	REF	REF	994970-2	COUNTER, MAGNETIC	164
-	1	-	1	-	240638-1	SPRING, FEED FINGER	163
-	1	-	1	-	3-23627-7	PIN, RETAIN, GRVD, 3/16 X .854	137
-	1	1	1	1	1-693855-1	FRONT STRIP GUIDE	96
-	2	2	2	2	2168083-1	SCR, SKT HD CAP, RoHS, M3 X 8.0	94
6 -	1	1	1	1	2119955-2	ASSY, LUBRICATOR, END FEED	84
-	1	1	1	1	455888-6	SPACER, CRIMPER	82
-	1	1	1	1	1803607-2	DOCUMENTATION PACKAGE	71
-	1	1	1	1	2119740-1	TAG,IDENTIFICATION	67
-	2	2	2	2	2168078-1	SCREW, DRIVE, RH, RoHS, 2 x .188	66
-	2	2	2	2	2-18032-5	SCR, SET, FLT PNT, M5 X 20.0	61
-	1	1	1	1	2168083-2	SCR, SKT HD CAP, RoHS, M4 X 8.0	60
-	1	1	1	1	5-18022-5	SCR, HEX HD CAP, M4 X 6.0	59
-	1	1	1	1	3-694433-4	FEED PAWL	58
-	2	2	2	2	1-2168083-0	SCR, SKT HD CAP, RoHS, M4 X 10	57
-	2	2	2	2	2168083-2	SCR, SKT HD CAP, RoHS, M4 X 8.0	56
-	1	-	1	-	1803735-1	SPECIAL PAWL HOLDER, EF, AIR	51
-	1	2	1	2	18023-9	SCR, SKT HD CAP M4 X 6.0	49
-	-	1	-	1	2119652-1	FEED CAM, PRE FEED	48
-	-	1	-	1	2119653-1	FEED CAM, POST FEED	47
-	1	1	1	1	2-2119655-7	APPLICATOR BASIC ASSEMBLY, EF	46
-	1	1	1	1	1803517-1	RAM ASSEMBLY, EF ATLANTIC	44
-	1	1	1	1	1803602-1	SCR, BHSC, RoHS (M8 X 25)	41
-	4	4	4	4	1-18028-2	WASHER, FLAT, REG M4	33
-	1	1	1	1	2168083-9	SCR, SKT HD CAP, RoHS, M4 X 20	31
-	2	2	2	2	2079383-4	SCR, BHSC, RoHS (M4 X 8)	30
-	1	1	1	1	2168083-2	SCR, SKT HD CAP, RoHS, M4 X 8.0	29
-	1	1	1	1	1633524-2	STRIPPER	28
-	1	1	1	1	2119533-6	STRIPPER, SIDE FEED	27
-	1	1	1	1	356835-1	LEVER, DRAG RELEASE	26
-	1	1	1	1	240792-2	DRAG, TERMINAL	25
-	1	1	1	1	1803727-2	PLATE, STRIP GUIDE	24
-	1	1	1	1	980371-4	SCR, SKT HD SHLDR 5.0 DIA X 6.0	23
-	2	2	2	2	22281-8	SPRING, COMPRESSION	22
-	1	1	1	1	2-1901259-2	GUIDE, LOWER STRIP	18
-	4	4	4	4	1-2079383-1	SCR, BHSC, RoHS (M6 X 12)	17
-	2	2	2	2	1-2168083-1	SCR, SKT HD CAP, RoHS, M3 X 6	16
1 -	1	1	1	1	1633526-2	PLATE, SHEAR	15
1 -	1	1	1	1	1803822-1	HOLDER, SHEAR	14
1 -	1	1	1	1	1633525-1	SHEAR, FLOATING	13
-	1	1	1	1	6-22279-4	SPRING, COMPRESSION	12
-	1	1	1	1	356885-5	STOP, SHEAR	11
-	-	-	-	-	-	-	10
1	1	2	2	1	1803806-1	ANVIL, COMBINATION	8
-	1	1	1	1	1803821-1	DEPRESSOR, SHEAR	7
-	-	-	-	-	-	-	6
-	1	1	1	1	238011-8	BLOCK, CRIMPER SPACER	4
1	2	2	1	1	1-1803108-5	CRIMPER, INSULATION O	3
-	1	1	1	1	455888-6	SPACER, CRIMPER	2
1	1	2	2	1	6-1752057-2	CRIMPER, WIRE PREMIUM, STEPPED	1
	-77	-72	-71	-2	-1 PART NO	DESCRIPTION	ITEM NO

ATLANTIC VERSION
Shown on sheets 1 of 4 & 2 of 4
(Pacific version shown on sheets 3 of 4 & 4 of 4)

THIS DRAWING IS A CONTROLLED DOCUMENT FOR TYCO ELECTRONICS CORPORATION IT IS SUBJECT TO CHANGE AND THE CONTROLLING ENGINEERING ORGANIZATION SHOULD BE CONTACTED FOR THE LATEST REVISION.

DIMENSIONS: mm

TOLERANCES UNLESS OTHERWISE SPECIFIED:
0 PLC ±-
1 PLC ±-
2 PLC ±-
3 PLC ±-
4 PLC ±-
ANGLES ±-

MATERIAL - -
FINISH - -

DWN M. HERR 16APR2019
CHK T. ELBIN 16APR2019
APVD B. BAIR 16APR2019
PRODUCT SPEC -
APPLICATION SPEC -
WEIGHT -

TE Connectivity
Harrisburg, PA 17105-3608

NAME Ocean End Feed Applicator -

SIZE A1 | CAGE CODE 00779 | DRAWING NO C-2150982 | RESTRICTED TO -

Customer Accessible Production Drawing | SCALE 1:1 | SHEET 1 OF 4 | REV A

SHEETS 3 & 4 ARE NOT REQUIRED FOR ATLANTIC VERSION

THIS DRAWING IS UNPUBLISHED. RELEASED FOR PUBLICATION 2019
© COPYRIGHT 2019 BY TYCO ELECTRONICS CORPORATION. ALL RIGHTS RESERVED.

LOC	DIST
A	66

REVISIONS

P	LTR	DESCRIPTION	DATE	DWN	APVD
	-	SEE SHEET 1	-	-	-

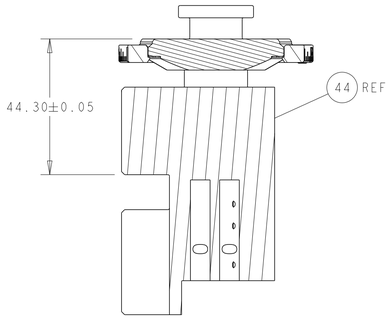

RAM SET-UP

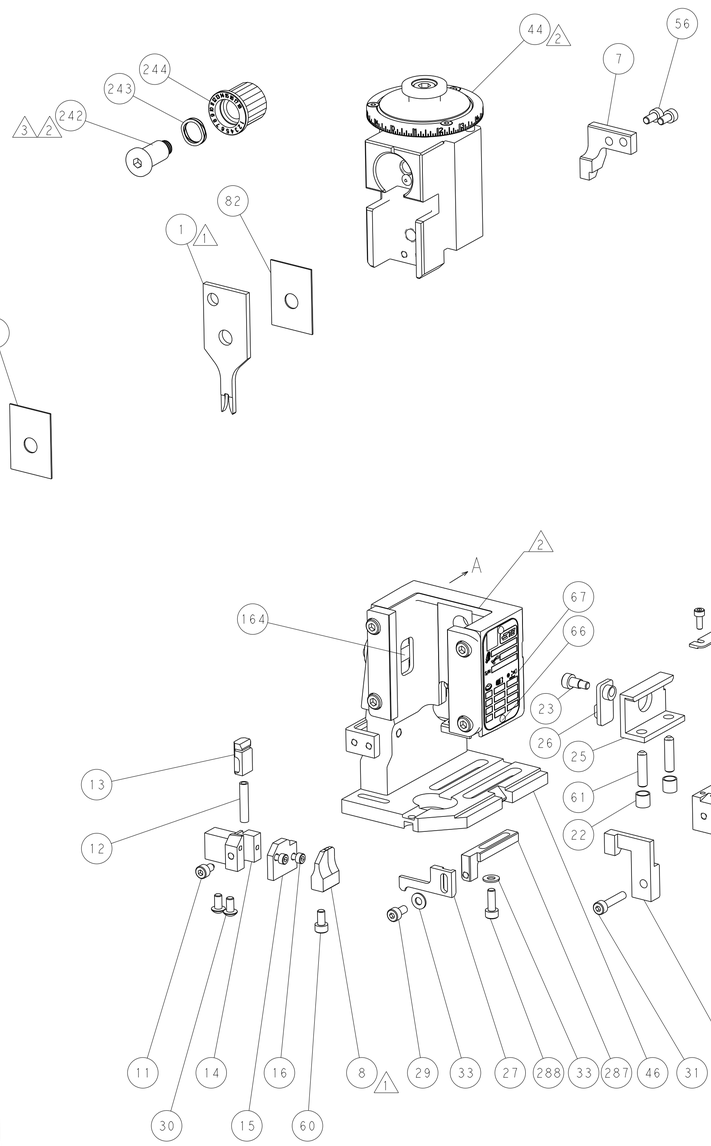

FEED TYPE MECHANICAL

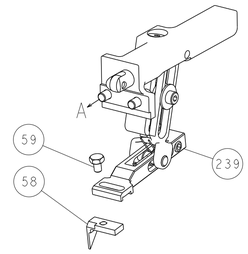

PNEUMATIC

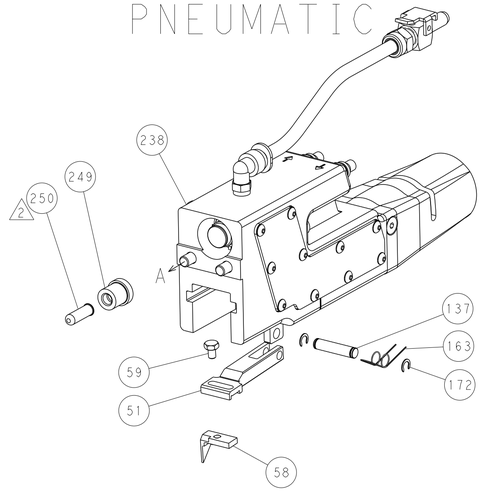

CAM POSITIONS

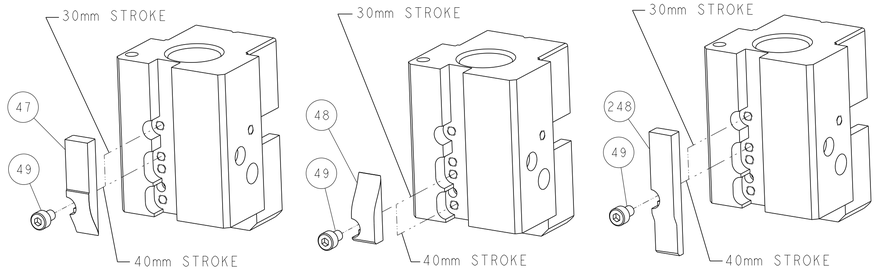

ATLANTIC VERSION

Shown on sheets 1 of 4 & 2 of 4

(Pacific version shown on sheets 3 of 4 & 4 of 4)

THIS DRAWING IS A CONTROLLED DOCUMENT FOR TYCO ELECTRONICS CORPORATION IT IS SUBJECT TO CHANGE AND THE CONTROLLING ENGINEERING ORGANIZATION SHOULD BE CONTACTED FOR THE LATEST REVISION.

DIMENSIONS: mm

TOLERANCES UNLESS OTHERWISE SPECIFIED:
0 PLC ±-
1 PLC ±-
2 PLC ±-
3 PLC ±-
4 PLC ±-
ANGLES ±-

MATERIAL -

FINISH -

DWN	M. HERR	16APR2019
CHK	T. ELBIN	16APR2019
APVD	B. BAIR	16APR2019
PRODUCT SPEC	-	
APPLICATION SPEC	-	
WEIGHT	-	

TE Connectivity
Harrisburg, PA 17105-3608

NAME: Ocean End Feed Applicator -

SIZE	CAGE CODE	DRAWING NO	RESTRICTED TO
A1	00779	C-2150982	-

Customer Accessible Production Drawing | SCALE 1:1 | SHEET 2 OF 4 | REV A

SHEETS 3 & 4 ARE NOT REQUIRED FOR ATLANTIC VERSION

THIS DRAWING IS UNPUBLISHED. RELEASED FOR PUBLICATION 2019
© COPYRIGHT 2019 BY TYCO ELECTRONICS CORPORATION. ALL RIGHTS RESERVED.

LOC	DIST
A	66

REVISIONS

P	LTR	DESCRIPTION	DATE	DWN	APVD
	-	SEE SHEET 1	-	-	-

PART NUMBER	REVISION	DESCRIPTION	FEED TYPE
2-2150982-1	A	FINE CRIMP HEIGHT ADJUST	MECHANICAL
2-2150982-2	A	FINE CRIMP HEIGHT ADJUST	PNEUMATIC
7-2150982-7	A	CRIMP TOOLING KIT	-

PACIFIC VERSION TERMINATOR INTERFACE ADAPTER

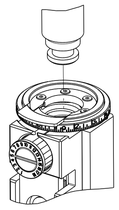

APPLICATOR DATA		
CRIMP	SIZE	TYPE
WIRE	2.29 mm [.090]	F
INSUL	2.80 mm [.110]	O
APPL INSTRUCTIONS 408-35043		

TERMINAL DATA: TE TERMINAL		UTILUX CRIMP SPECIFICATION
TERMINAL NAME: RECEPTACLE, FLAG QC 6.3		
WIRE STRIP LENGTH 4.87-5.13 mm [.192-.202 IN]		INSULATION DIAMETER RANGE ∅2.20-2.50 mm [.087-.098 IN]
TERMINAL APPLICATION SPECIFICATION	H 2591 Rev 2	- -
	-	- -

TERMINALS APPLIED 6

TE TERMINAL	TE TERMINAL	TE TERMINAL	TE TERMINAL
1-1627100-1	1-1627100-2		

WIRE SIZE	CRIMP HEIGHT mm [INCH]	CRIMP HEIGHT REFERENCE SETTING 4
1.00mm2	1.55+/-0.025 [.061+/-.001]	6.7
0.75mm2	1.50+/-0.025 [.059+/-.001]	7.2
0.50mm2	1.45+/-0.025 [.057+/-.001]	7.7

1. RECOMMENDED SPARE PARTS
2. REFER TO SUPPLIED INSTRUCTION SHEET FOR CLEANING, LUBRICATION AND STORAGE OF APPLICATOR.
3. APPLY PART NUMBER 2-23419-6 LOCTITE TO THREADS OF ITEM 242.
4. CRIMP HEIGHT REFERENCE SETTING WAS THE SETTING USED WHEN THE APPLICATOR WAS QUALIFIED AT THE FACTORY. ADJUSTMENT MAY BE NECESSARY WHEN RUNNING APPLICATOR IN THE FIELD.
5. UNLESS SPECIFIED OTHERWISE TORQUE VALUES SHALL BE USED PER DOCUMENT, 101-35000.
6. TERMINAL LUBRICANT IS RECOMMENDED.
7. RECOMMENDED TO RUN SPLIT CYCLE MODE ON TERMINATING UNIT.

*WARNING
ON INSTALLATION, SET WIRE DISC TO CRIMP HEIGHT REFERENCE SETTING FOR LARGEST WIRE SIZE. CRIMP HEIGHT REFERENCE SETTINGS GREATER THAN THE VALUE SHOWN MAY CAUSE DAMAGE TO THE CRIMP TOOLING, REFER TO THE INSTRUCTION SHEET FOR PROPER SETUP AND ADJUSTMENTS.

PACIFIC VERSION
Shown on sheets 3 of 4 & 4 of 4
(Atlantic version shown on sheets 1 of 4 & 2 of 4)

			PART NO	DESCRIPTION	ITEM NO
-	1	1	2168083-3	SCR, SKT HD CAP, RoHS, M4 X 12.0	288
-	1	1	2119534-1	MOUNT, STRIPPER, SIDE FEED	287
-	1	-	2119640-1	PUSH ROD, AIR FEED	250
-	1	-	1803259-1	BUSHING, FLANGED	249
-	1	1	2119082-4	CAM, SNAIL, INSULATION ADJUSTMENT	244
-	1	1	2079764-1	WASHER, WAVE SPRING, CREST-TO-CREST	243
3 -	1	1	2119083-1	RETAINER, INSULATION DIAL	242
-	-	1	2119580-1	MECHANICAL FEED ASSEMBLY	239
-	1	-	2063440-1	AIR FEED MODULE	238
-	1	1	1-18028-0	WASHER, FLAT, REG M8	192
-	4	4	2079383-9	SCR, BHSC, RoHS (M6 X 20)	186
-	2	-	21045-3	RING, RETAIN, EXTERN, 3/16 CRESCENT	172
-	REF	REF	994970-2	COUNTER, MAGNETIC	164
-	1	-	240638-1	SPRING, FEED FINGER	163
-	1	-	2119641-2	FEED CAM, AIR FEED	152
-	1	1	2168083-8	SCR, SKT HD CAP, RoHS, M4 X 16	144
-	-	1	2119653-2	FEED CAM, POST FEED	142
-	1	1	2-2119655-8	APPLICATOR BASIC ASSEMBLY, EF	141
-	1	1	1803518-1	RAM ASSEMBLY, EF PACIFIC	140
-	1	-	3-23627-7	PIN, RETAIN, GRVD, 3/16 X .854	137
-	1	1	1-693855-1	FRONT STRIP GUIDE	96
-	2	2	2168083-1	SCR, SKT HD CAP, RoHS, M3 X 8.0	94
6 -	1	1	2119955-2	ASSY, LUBRICATOR, END FEED	84
-	1	1	455888-6	SPACER, CRIMPER	82
-	1	1	1803607-2	DOCUMENTATION PACKAGE	71
-	1	1	2119740-1	TAG,IDENTIFICATION	67
-	2	2	2168078-1	SCREW, DRIVE, RH, RoHS, 2 x .188	66
-	2	2	2-18032-5	SCR, SET, FLT PNT, M5 X 20.0	61
-	1	1	5-18022-5	SCR, HEX HD CAP, M4 X 6.0	59
-	1	1	3-694433-4	FEED PAWL	58
-	2	2	1-2168083-0	SCR, SKT HD CAP, RoHS, M4 X 10	57
-	2	2	2168083-2	SCR, SKT HD CAP, RoHS, M4 X 8.0	56
-	1	1	1803735-1	SPECIAL PAWL HOLDER, EF, AIR	51
-	1	2	18023-9	SCR, SKT HD CAP M4 X 6.0	49
-	-	1	2119652-1	FEED CAM, PRE FEED	48
-	1	1	1803602-1	SCR, BHSC, RoHS (M8 X 25)	41
-	4	4	1-18028-2	WASHER, FLAT, REG M4	33
-	1	1	2168083-9	SCR, SKT HD CAP, RoHS, M4 X 20	31
-	2	2	2079383-4	SCR, BHSC, RoHS (M4 X 8)	30
-	1	1	2168083-2	SCR, SKT HD CAP, RoHS, M4 X 8.0	29
-	1	1	1633524-2	STRIPPER	28
-	1	1	2119533-6	STRIPPER, SIDE FEED	27
-	1	1	356835-1	LEVER, DRAG RELEASE	26
-	1	1	240792-2	DRAG, TERMINAL	25
-	1	1	1803727-2	PLATE, STRIP GUIDE	24
-	1	1	980371-4	SCR, SKT HD SHLDR 5.0 DIA X 6.0	23
-	2	2	22281-8	SPRING, COMPRESSION	22
-	1	1	2-1901259-2	GUIDE, LOWER STRIP	18
-	2	2	1-2168083-1	SCR, SKT HD CAP, RoHS, M3 X 6	16
1 -	1	1	1633526-2	PLATE, SHEAR	15
1 -	1	1	1803822-1	HOLDER, SHEAR	14
1 -	1	1	1633525-1	SHEAR, FLOATING	13
-	1	1	6-22279-4	SPRING, COMPRESSION	12
-	1	1	356885-5	STOP, SHEAR	11
-	-	-	-	-	10
1	1	1	1803806-1	ANVIL, COMBINATION	8
-	1	1	1803821-1	DEPRESSOR, SHEAR	7
-	-	-	-	-	6
-	1	1	238011-8	BLOCK, CRIMPER SPACER	4
1	1	1	1-1803108-5	CRIMPER, INSULATION O	3
-	1	1	455888-6	SPACER, CRIMPER	2
1	1	1	6-1752057-2	CRIMPER, WIRE PREMIUM, STEPPED	1

-77-22-21

THIS DRAWING IS A CONTROLLED DOCUMENT FOR TYCO ELECTRONICS CORPORATION IT IS SUBJECT TO CHANGE AND THE CONTROLLING ENGINEERING ORGANIZATION SHOULD BE CONTACTED FOR THE LATEST REVISION.

DWN	M. HERR	16APR2019
CHK	T. ELBIN	16APR2019
APVD	B. BAIR	16APR2019
PRODUCT SPEC	-	
APPLICATION SPEC	-	
WEIGHT	-	

DIMENSIONS: mm
TOLERANCES UNLESS OTHERWISE SPECIFIED: 0 PLC ±, 1 PLC ±, 2 PLC ±, 3 PLC ±, 4 PLC ±, ANGLES ±
MATERIAL - -
FINISH - -

TE Connectivity
Harrisburg, PA 17105-3608

NAME: Ocean End Feed Applicator -

SIZE	CAGE CODE	DRAWING NO	RESTRICTED TO
A1	00779	C-2150982	-

Customer Accessible Production Drawing | SCALE 1:1 | SHEET 3 OF 4 | REV A

SHEETS 1 & 2 ARE NOT REQUIRED FOR PACIFIC VERSION

THIS DRAWING IS UNPUBLISHED. RELEASED FOR PUBLICATION 2019
© COPYRIGHT 2019 BY TYCO ELECTRONICS CORPORATION. ALL RIGHTS RESERVED.

LOC	DIST
A	66

REVISIONS

P	LTR	DESCRIPTION	DATE	DWN	APVD
	-	SEE SHEET 1	-	-	-

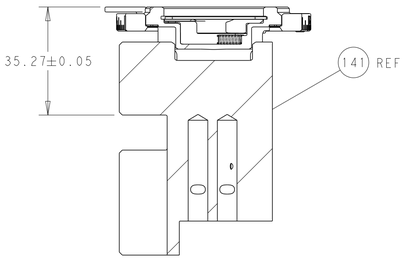

RAM SET-UP

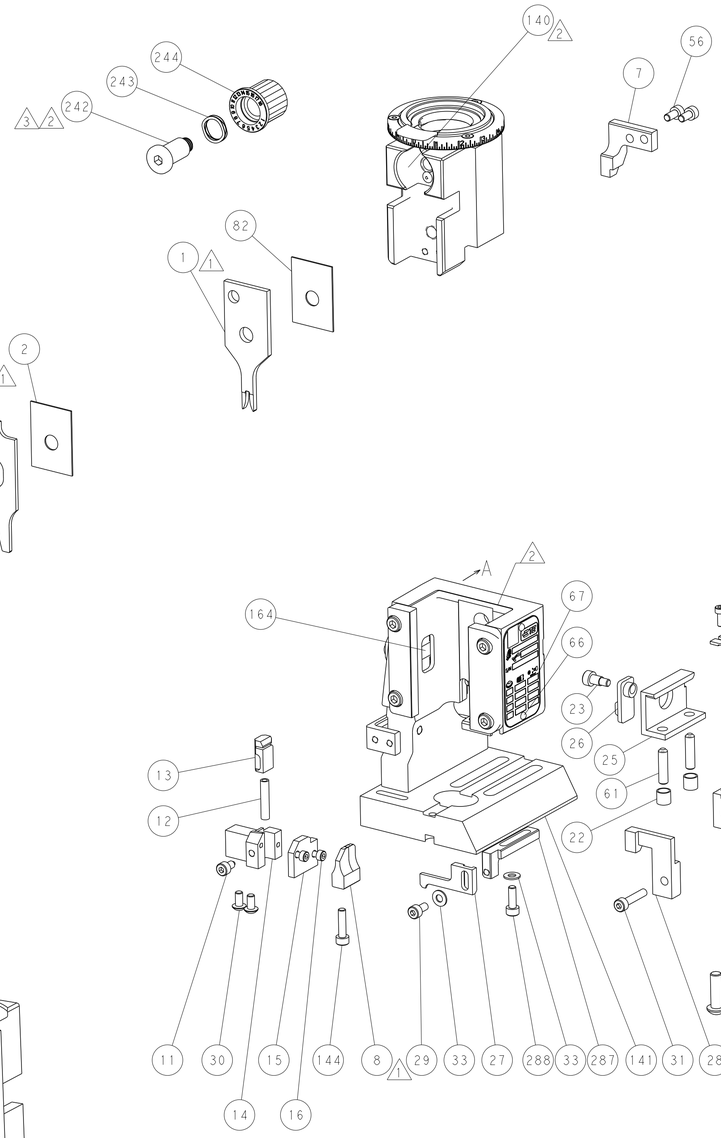

FEED TYPE

MECHANICAL

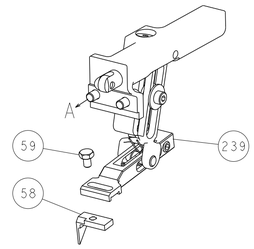

PNEUMATIC

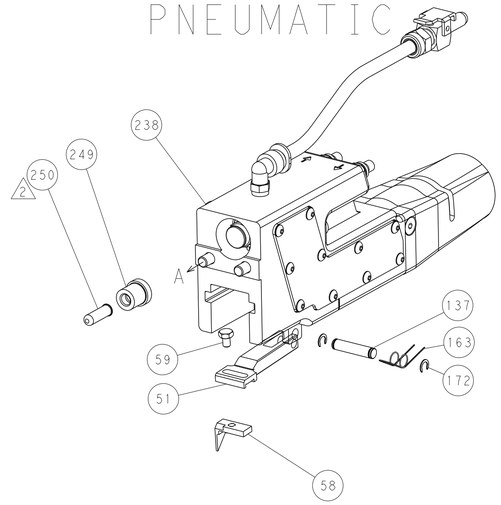

CAM POSITIONS

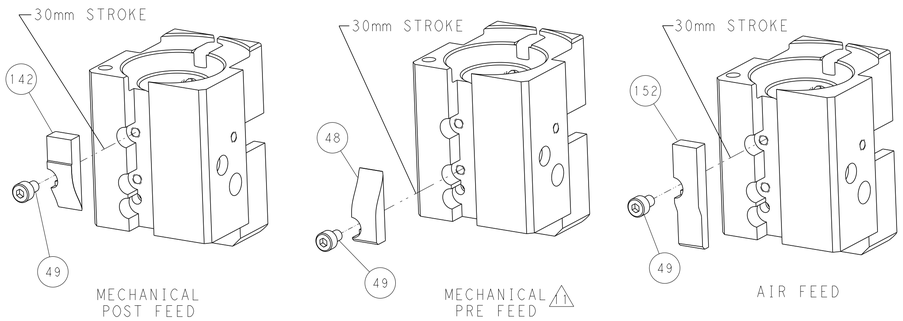

PACIFIC VERSION

Shown on sheets 3 of 4 & 4 of 4

(Atlantic version shown on sheets 1 of 4 & 2 of 4)

THIS DRAWING IS A CONTROLLED DOCUMENT FOR TYCO ELECTRONICS CORPORATION IT IS SUBJECT TO CHANGE AND CONTROLLING ENGINEERING ORGANIZATION SHOULD BE CONTACTED FOR THE LATEST REVISION.

DIMENSIONS: mm

TOLERANCES UNLESS OTHERWISE SPECIFIED:
0 PLC ±-
1 PLC ±-
2 PLC ±-
3 PLC ±-
4 PLC ±-
ANGLES ±-

MATERIAL -
FINISH -

DWN	M HERR	16APR2019
CHK	T ELBIN	16APR2019
APVD	B BAIR	16APR2019
PRODUCT SPEC	-	
APPLICATION SPEC	-	
WEIGHT	-	

TE Connectivity
Harrisburg, PA 17105-3608

NAME: Ocean End Feed Applicator -

SIZE	CAGE CODE	DRAWING NO	RESTRICTED TO
A1	00779	C-2150982	-

Customer Accessible Production Drawing | SCALE 1:1 | SHEET 4 OF 4 | REV A

SHEETS 1 & 2 ARE NOT REQUIRED FOR PACIFIC VERSION