THIS DRAWING IS UNPUBLISHED. RELEASED FOR PUBLICATION 20
© COPYRIGHT 20 BY TYCO ELECTRONICS CORPORATION. ALL RIGHTS RESERVED.

LOC	DIST
A	66

REVISIONS

P	LTR	DESCRIPTION	DATE	DWN	APVD
	A	RELEASE	31JUL2018	AW	CT
	A1	ECR-19-003795	08MAR2019	RK	CT
	B	ECR-19-005987	14APR2019	TB	TE
	C	ECR-19-011870	27JUL2019	TB	TE

PART NUMBER	REVISION	DESCRIPTION	FEED TYPE
2150933-2	C	FINE CRIMP HEIGHT ADJUST	PNEUMATIC
7-2150933-2	C	PNEUMATIC AND CRIMP TOOLING KIT	PNEUMATIC
7-2150933-7	A	CRIMP TOOLING KIT	-

ATLANTIC VERSION TERMINATOR INTERFACE ADAPTER

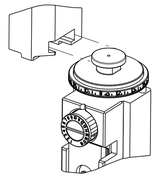

APPLICATOR DATA		
CRIMP	SIZE	TYPE
WIRE	5.59 mm [.220]	F
INSUL	7.10 mm [.280]	F
APPL INSTRUCTIONS 408-35043		

TERMINAL DATA: KET TERMINAL		TE CRIMP SPECIFICATION
TERMINAL NAME: RING		
WIRE STRIP LENGTH 6.40-7.16 mm [.252-.282 IN]		INSULATION DIAMETER RANGE ∅3.90-5.20 mm [.154-.205 IN]
TERMINAL APPLICATION SPECIFICATION	NONE	- -
	-	- -

TERMINALS APPLIED 5 7

TE TERMINAL	KET TERMINAL	TE TERMINAL	KET TERMINAL
3311243-1	ST710246-2	3311243-2	ST710246-1

WIRE SIZE	CRIMP HEIGHT mm [INCH]	CRIMP HEIGHT REFERENCE SETTING 4
10 AWG	3.76+/-0.05 [.148+/-.002]	4.3
5.00mm2	3.73+/-0.05 [.147+/-.002]	4.8
4.00mm2	3.58+/-0.05 [.141+/-.002]	6.6
12 AWG OR 3.00mm2	3.46+/-0.05 [.136+/-.002]	7.9

1. RECOMMENDED SPARE PARTS
2. REFER TO SUPPLIED INSTRUCTION SHEET FOR CLEANING, LUBRICATION AND STORAGE OF APPLICATOR.
3. APPLY PART NUMBER 2-23419-6 LOCTITE TO THREADS OF ITEM 242. APPLY PART NUMBER 1-23419-5 LOCTITE TO THREADS OF ITEM 180.
4. CRIMP HEIGHT REFERENCE SETTING WAS THE SETTING USED WHEN THE APPLICATOR WAS QUALIFIED AT THE FACTORY. ADJUSTMENT MAY BE NECESSARY WHEN RUNNING APPLICATOR IN THE FIELD.
5. TERMINAL LUBRICANT IS RECOMMENDED.
6. UNLESS SPECIFIED OTHERWISE TORQUE VALUES SHALL BE USED PER DOCUMENT, 101-35000.
7. TERMINAL PITCH NOT COMPATIBLE WITH MECHANICAL FEED.

*WARNING
ON INSTALLATION, SET WIRE DISC TO CRIMP HEIGHT REFERENCE SETTING FOR LARGEST WIRE SIZE. CRIMP HEIGHT REFERENCE SETTINGS GREATER THAN THE VALUE SHOWN MAY CAUSE DAMAGE TO THE CRIMP TOOLING. REFER TO THE INSTRUCTION SHEET FOR PROPER SETUP AND ADJUSTMENTS.

ATLANTIC VERSION
Shown on sheets 1 of 4 & 2 of 4
(Pacific version shown on sheets 3 of 4 & 4 of 4)

-	1	1	2119641-1	FEED CAM, AIR FEED	248
-	1	1	2119082-2	CAM, SNAIL, INSULATION ADJUSTMENT	244
-	1	1	2079764-1	WASHER, WAVE SPRING, CREST-TO-CREST	243
3 -	1	1	2119083-1	RETAINER, INSULATION DIAL	242
-	1	1	2844940-4	AIR FEED MODULE	238
-	1	1	1-18028-0	WASHER, FLAT, REG M8	192
-	2	2	1-2168083-1	SCR, SKT HD CAP, RoHS, M3 X 6	191
3 -	1	1	1752354-3	STANDOFF,HOLD-DOWN	180
-	1	1	6-993111-6	PIN, SLOTTED SPRING 3.0 X 14.0	177
-	1	1	8-22280-7	SPRING, COMPRESSION	176
-	1	1	1752353-2	GUIDE PIN,HOLDDOWN	175
-	1	1	1901680-2	GUIDE PIN,HOLDDOWN	174
-	REF	REF	994970-2	COUNTER, MAGNETIC	164
5 -	1	1	2119955-2	ASSY, LUBRICATOR, END FEED	84
-	1	1	455888-5	SPACER, CRIMPER	82
-	1	1	2119791-9	DEPRESSOR, WIRE	73
-	1	1	1803607-4	DOCUMENTATION PACKAGE	71
-	2	2	3-18032-3	SCR, SET, FLT PNT, M3 X 20.0	70
-	1	1	2119740-1	TAG,IDENTIFICATION	67
-	2	2	2168078-1	SCREW, DRIVE, RH, RoHS, 2 x .188	66
-	1	1	1901681-1	HOLDDOWN, TERMINAL	65
-	1	1	2168083-2	SCR, SKT HD CAP, RoHS, M4 X 8.0	60
-	1	1	5-18022-5	SCR, HEX HD CAP, M4 X 6.0	59
-	4	4	2168400-4	SHCS, LOW HEAD, RoHS, M4 X 8	57
-	2	2	2-2168083-5	SCR, SKT HD CAP, RoHS, M4 X 14	56
-	2	2	5018030-1	NUT, HEX, REG, RoHS, M3	54
-	2	2	986965-8	NUT, LOCK, HEX, TORQUE (M4)	53
-	1	1	1-5018030-0	NUT, HEX, REG, RoHS, M3.5	52
-	1	1	2063961-9	FEED FINGER	51
-	1	1	18023-9	SCR, SKT HD CAP M4 X 6.0	49
-	1	1	2119655-5	APPLICATOR BASIC ASSEMBLY, EF	46
-	1	1	1803517-1	RAM ASSEMBLY, EF ATLANTIC	44
-	1	1	1803602-1	SCR, BHSC, RoHS (M8 X 25)	41
-	8	8	1-18028-2	WASHER, FLAT, REG M4	33
-	2	2	2168083-9	SCR, SKT HD CAP, RoHS, M4 X 20	31
-	2	2	2168083-2	SCR, SKT HD CAP, RoHS, M4 X 8.0	29
-	1	1	690455-2	STRIPPER, FRONT CASTING	27
-	2	2	1-2168083-6	SCR, SKT HD CAP, RoHS, M4 X 35	25
-	1	1	1752371-5	PLATE, STRIP GUIDE	24
-	2	2	22281-9	SPRING, COMPRESSION	22
-	1	1	1633168-1	ARM, STOCK DRAG	21
-	1	1	2-464452-7	DRAG, STOCK	20
-	1	1	1-1901696-5	STRIP GUIDE, REAR	19
-	1	1	1-1901695-5	STRIP GUIDE, FRONT	18
-	4	4	1-2079383-1	SCR, BHSC, RoHS (M6 X 12)	17
-	1	1	4-240641-0	SPACER	16
-	1	1	1752360-1	SPACER,HOLD-DOWN	13
1 -	1	1	240644-9	PLATE, REAR SHEAR	11
-	-	-	-	-	10
1 -	1	1	690482-4	PLATE, FRONT SHEAR	9
1 -	1	2	1-1803426-8	ANVIL, COMBINATION, END FEED	8
1 -	1	1	1-2217206-2	BLADE, SLUG	7
-	-	-	-	-	6
-	1	1	2-240641-9	SPACER	5
-	1	1	4-238011-2	BLOCK, CRIMPER SPACER	4
1 -	2	1	9-1803016-1	CRIMPER, INSULATION F	3
-	1	1	1-455888-5	SPACER, CRIMPER	2
1 -	2	1	456413-2	CRIMPER, WIRE PREMIUM	1
	-77-72-	2	PART NO	DESCRIPTION	ITEM NO

THIS DRAWING IS A CONTROLLED DOCUMENT FOR TYCO ELECTRONICS CORPORATION IT IS SUBJECT TO CHANGE AND ITS CONTROLLING ENGINEERING ORGANIZATION SHOULD BE CONTACTED FOR THE LATEST REVISION

DIMENSIONS: mm

TOLERANCES UNLESS OTHERWISE SPECIFIED:
0 PLC ±-
1 PLC ±-
2 PLC ±-
3 PLC ±-
4 PLC ±-
ANGLES ±-

MATERIAL - -
FINISH - -

DWN R.KNEPPER 29-JUN-18
CHK T.BROOKENS 29-JUN-18
APVD C.TOPPER 29-JUN-18
PRODUCT SPEC -
APPLICATION SPEC -
WEIGHT -

TE Connectivity
Harrisburg, PA 17105-3608

NAME Ocean End Feed Applicator -

SIZE	CAGE CODE	DRAWING NO	RESTRICTED TO
A1	00779	C-2150933	-

Customer Accessible Production Drawing | SCALE 1:1 | SHEET 1 OF 4 | REV C

SHEETS 3 & 4 ARE NOT REQUIRED FOR ATLANTIC VERSION

THIS DRAWING IS UNPUBLISHED. RELEASED FOR PUBLICATION 20
© COPYRIGHT 20 BY TYCO ELECTRONICS CORPORATION. ALL RIGHTS RESERVED.

LOC	DIST
A	66

REVISIONS

P	LTR	DESCRIPTION	DATE	DWN	APVD
	-	SEE SHEET 1	-	-	-

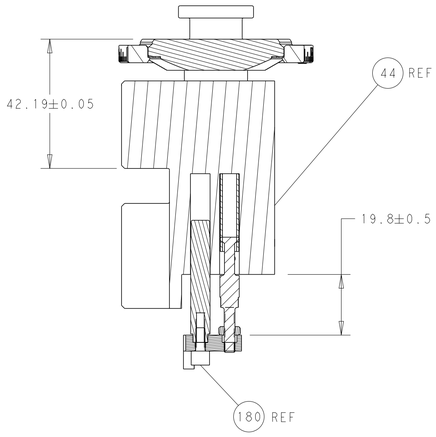

RAM AND HOLDDOWN SET-UP

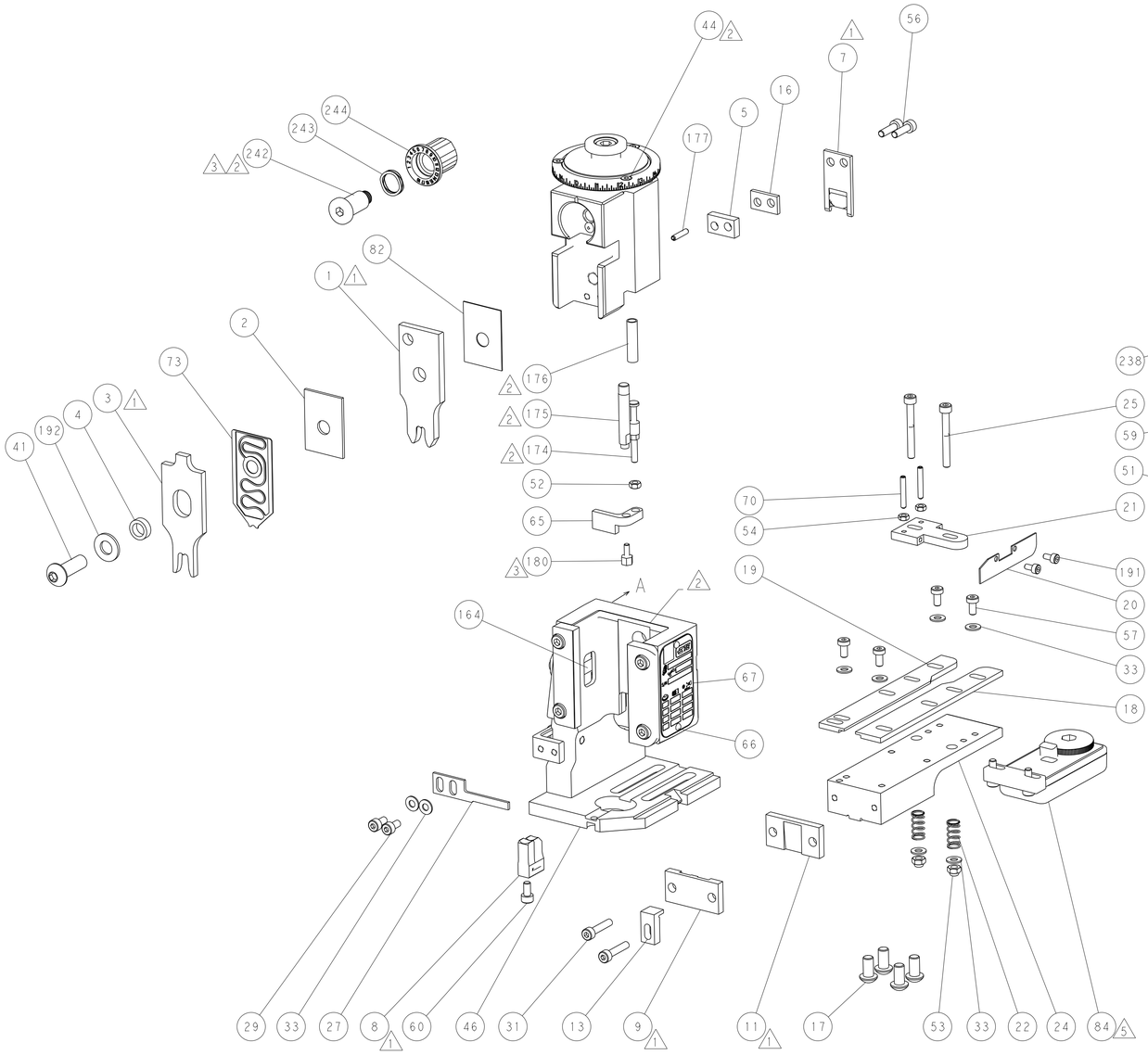

FEED TYPE

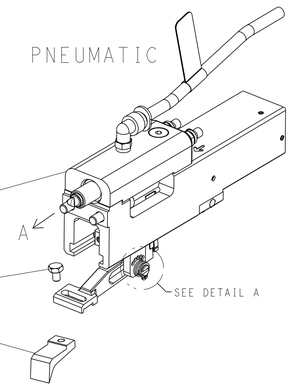

FEED SPRING SETTING POSITION
(SHOWN FROM REAR SIDE)

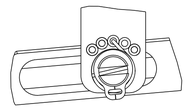

DETAIL A

CAM POSITION

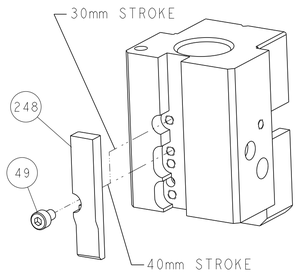

AIR FEED

ATLANTIC VERSION
Shown on sheets 1 of 4 & 2 of 4
(Pacific version shown on sheets 3 of 4 & 4 of 4)

THIS DRAWING IS A CONTROLLED DOCUMENT FOR TYCO ELECTRONICS CORPORATION IT IS SUBJECT TO CHANGE AND ITS CONTROL NO. ENGINEERING ORGANIZATION SHOULD BE CONTACTED FOR THE LATEST REVISION

DIMENSIONS: mm

TOLERANCES UNLESS OTHERWISE SPECIFIED:
0 PLC ±-
1 PLC ±-
2 PLC ±-
3 PLC ±-
4 PLC ±-
ANGLES ±-

MATERIAL -
FINISH -

DWN R KNEPPER 29-JUN-18
CHK T BROOKENS 29-JUN-18
APVD C TOPPER 29-JUN-18
PRODUCT SPEC -
APPLICATION SPEC -
WEIGHT -

TE Connectivity
Harrisburg, PA 17105-3608

NAME Ocean End Feed Applicator -

SIZE	CAGE CODE	DRAWING NO	RESTRICTED TO
A1	00779	C-2150933	-

Customer Accessible Production Drawing | SCALE 1:1 | SHEET 2 OF 4 | REV C

SHEETS 3 & 4 ARE NOT REQUIRED FOR ATLANTIC VERSION

THIS DRAWING IS UNPUBLISHED. RELEASED FOR PUBLICATION 20
© COPYRIGHT 20 BY TYCO ELECTRONICS CORPORATION. ALL RIGHTS RESERVED.

LOC	DIST
A	66

REVISIONS

P	LTR	DESCRIPTION	DATE	DWN	APVD
	-	SEE SHEET 1	-	-	-

PART NUMBER	REVISION	DESCRIPTION	FEED TYPE
2-2150933-2	C	FINE CRIMP HEIGHT ADJUST	PNEUMATIC
7-2150933-7	A	CRIMP TOOLING KIT	-

PACIFIC VERSION TERMINATOR INTERFACE ADAPTER

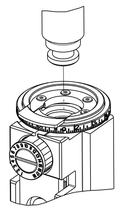

APPLICATOR DATA		
CRIMP	SIZE	TYPE
WIRE	5.59 mm [.220]	F
INSUL	7.10 mm [.280]	F
APPL INSTRUCTIONS 408-35043		

TERMINAL DATA: KET TERMINAL		TE CRIMP SPECIFICATION
TERMINAL NAME: RING		
WIRE STRIP LENGTH 6.40-7.16 mm [.252-.282 IN]	INSULATION DIAMETER RANGE ∅3.90-5.20 mm [.154-.205 IN]	
TERMINAL APPLICATION SPECIFICATION	NONE	-
	-	-

TERMINALS APPLIED 5 7

TE TERMINAL	KET TERMINAL	TE TERMINAL	KET TERMINAL
3311243-1	ST710246-2	3311243-2	ST710246-1

WIRE SIZE	CRIMP HEIGHT mm [INCH]	CRIMP HEIGHT REFERENCE SETTING 4
10 AWG	3.76+/-0.05 [.148+/-.002]	4.3
5.00mm2	3.73+/-0.05 [.147+/-.002]	4.8
4.00mm2	3.58+/-0.05 [.141+/-.002]	6.6
12 AWG OR 3.00mm2	3.46+/-0.05 [.136+/-.002]	7.9

1 RECOMMENDED SPARE PARTS

2 REFER TO SUPPLIED INSTRUCTION SHEET FOR CLEANING, LUBRICATION AND STORAGE OF APPLICATOR.

3 APPLY PART NUMBER 2-23419-6 LOCTITE TO THREADS OF ITEM 242.
APPLY PART NUMBER 1-23419-5 LOCTITE TO THREADS OF ITEM 180.

4 CRIMP HEIGHT REFERENCE SETTING WAS THE SETTING USED WHEN THE APPLICATOR WAS QUALIFIED AT THE FACTORY. ADJUSTMENT MAY BE NECESSARY WHEN RUNNING APPLICATOR IN THE FIELD.

5 TERMINAL LUBRICANT IS RECOMMENDED.

6. UNLESS SPECIFIED OTHERWISE TORQUE VALUES SHALL BE USED PER DOCUMENT, 101-35000.

7 TERMINAL PITCH NOT COMPATIBLE WITH MECHANICAL FEED.

*WARNING
ON INSTALLATION, SET WIRE DISC TO CRIMP HEIGHT REFERENCE SETTING FOR LARGEST WIRE SIZE. CRIMP HEIGHT REFERENCE SETTINGS GREATER THAN THE VALUE SHOWN MAY CAUSE DAMAGE TO THE CRIMP TOOLING. REFER TO THE INSTRUCTION SHEET FOR PROPER SETUP AND ADJUSTMENTS.

PACIFIC VERSION
Shown on sheets 3 of 4 & 4 of 4
(Atlantic version shown on sheets 1 of 4 & 2 of 4)

		PART NO	DESCRIPTION	ITEM NO
	-	2119082-2	CAM, SNAIL, INSULATION ADJUSTMENT	244
	-	2079764-1	WASHER, WAVE SPRING, CREST-TO-CREST	243
3	-	2119083-1	RETAINER, INSULATION DIAL	242
	-	2844940-4	AIR FEED MODULE	238
	-	1-18028-0	WASHER, FLAT, REG M8	192
	-	1-2168083-1	SCR, SKT HD CAP, RoHS, M3 X 6	191
	-	2079383-9	SCR, BHSC, RoHS (M6 X 20)	186
3	-	1752354-3	STANDOFF,HOLD-DOWN	180
	-	6-993111-6	PIN, SLOTTED SPRING 3.0 X 14.0	177
	-	8-22280-7	SPRING, COMPRESSION	176
	-	1752353-2	GUIDE PIN,HOLDDOWN	175
	-	1901680-2	GUIDE PIN,HOLDDOWN	174
	REF	994970-2	COUNTER, MAGNETIC	164
	-	2119641-2	FEED CAM, AIR FEED	152
	-	2168083-8	SCR, SKT HD CAP, RoHS, M4 X 16	144
	-	2119655-6	APPLICATOR BASIC ASSEMBLY, EF	141
	-	1803518-1	RAM ASSEMBLY, EF PACIFIC	140
5	-	2119955-2	ASSY, LUBRICATOR, END FEED	84
	-	455888-5	SPACER, CRIMPER	82
	-	2119791-9	DEPRESSOR, WIRE	73
	-	1803607-4	DOCUMENTATION PACKAGE	71
	-	3-18032-3	SCR, SET, FLT PNT, M3 X 20.0	70
	-	2119740-1	TAG,IDENTIFICATION	67
	-	2168078-1	SCREW, DRIVE, RH, RoHS, 2 x .188	66
	-	1901681-1	HOLDDOWN, TERMINAL	65
	-	5-18022-5	SCR, HEX HD CAP, M4 X 6.0	59
	-	2168400-4	SHCS, LOW HEAD, RoHS, M4 X 8	57
	-	2-2168083-5	SCR, SKT HD CAP, RoHS, M4 X 14	56
	-	5018030-1	NUT, HEX, REG, RoHS, M3	54
	-	986965-8	NUT, LOCK, HEX, TORQUE (M4)	53
	-	1-5018030-0	NUT, HEX, REG, RoHS, M3.5	52
	-	2063961-9	FEED FINGER	51
	-	18023-9	SCR, SKT HD CAP M4 X 6.0	49
	-	1803602-1	SCR, BHSC, RoHS (M8 X 25)	41
	-	1-18028-2	WASHER, FLAT, REG M4	33
	-	2168083-9	SCR, SKT HD CAP, RoHS, M4 X 20	31
	-	2168083-2	SCR, SKT HD CAP, RoHS, M4 X 8.0	29
	-	690455-2	STRIPPER, FRONT CASTING	27
	-	1-2168083-6	SCR, SKT HD CAP, RoHS, M4 X 35	25
	-	1752371-5	PLATE, STRIP GUIDE	24
	-	22281-9	SPRING, COMPRESSION	22
	-	1633168-1	ARM, STOCK DRAG	21
	-	2-464452-7	DRAG, STOCK	20
	-	1-1901696-5	STRIP GUIDE, REAR	19
	-	1-1901695-5	STRIP GUIDE, FRONT	18
	-	4-240641-0	SPACER	16
	-	1752360-1	SPACER,HOLD-DOWN	13
1	-	240644-9	PLATE, REAR SHEAR	11
	-	-	-	10
1	-	690482-4	PLATE, FRONT SHEAR	9
1	1	1-1803426-8	ANVIL, COMBINATION, END FEED	8
1	-	1-2217206-2	BLADE, SLUG	7
	-	-	-	6
	-	2-240641-9	SPACER	5
	-	4-238011-2	BLOCK, CRIMPER SPACER	4
1	1	9-1803016-1	CRIMPER, INSULATION F	3
	-	1-455888-5	SPACER, CRIMPER	2
1	1	456413-2	CRIMPER, WIRE PREMIUM	1

THIS DRAWING IS A CONTROLLED DOCUMENT FOR TYCO ELECTRONICS CORPORATION IT IS SUBJECT TO CHANGE AND THE CONTROLLING ENGINEERING ORGANIZATION SHOULD BE CONTACTED FOR THE LATEST REVISION.

DIMENSIONS: mm

TOLERANCES UNLESS OTHERWISE SPECIFIED:
0 PLC ±
1 PLC ±
2 PLC ±
3 PLC ±
4 PLC ±
ANGLES ±

MATERIAL -
FINISH -

DWN R.KNEPPER 29-JUN-18
CHK T.BROOKENS 29-JUN-18
APVD C.TOPPER 29-JUN-18
PRODUCT SPEC -
APPLICATION SPEC -
WEIGHT -

TE Connectivity
Harrisburg, PA 17105-3608

NAME Ocean End Feed Applicator -

SIZE	CAGE CODE	DRAWING NO	RESTRICTED TO
A1	00779	C-2150933	-

Customer Accessible Production Drawing | SCALE 1:1 | SHEET 3 OF 4 | REV C

SHEETS 1 & 2 ARE NOT REQUIRED FOR PACIFIC VERSION

THIS DRAWING IS UNPUBLISHED. RELEASED FOR PUBLICATION 20
© COPYRIGHT 20 BY TYCO ELECTRONICS CORPORATION. ALL RIGHTS RESERVED.

LOC	DIST
A	66

REVISIONS

P	LTR	DESCRIPTION	DATE	DWN	APVD
	-	SEE SHEET 1	-	-	-

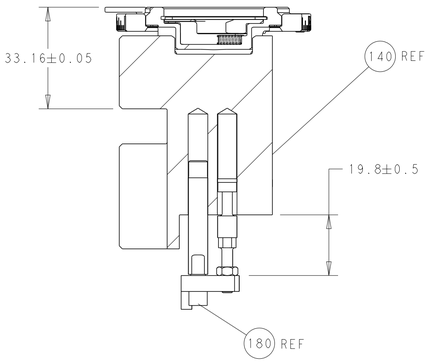

RAM AND HOLDDOWN SET-UP

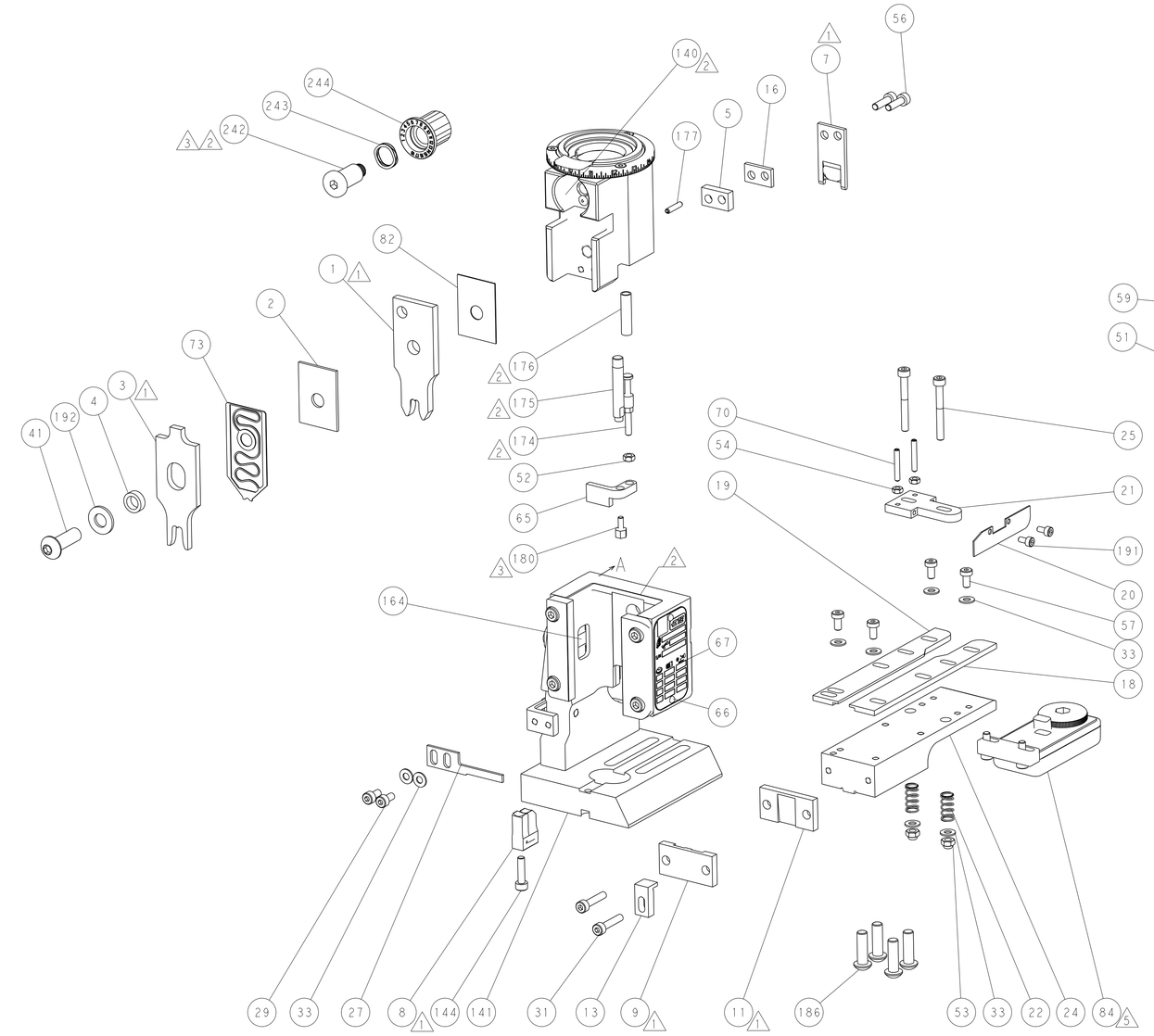

FEED TYPE

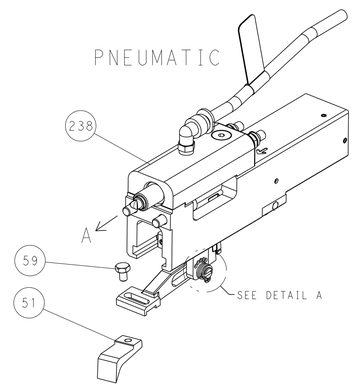

FEED SPRING SETTING POSITION
(SHOWN FROM REAR SIDE)

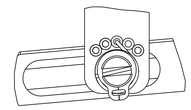

DETAIL A

CAM POSITION

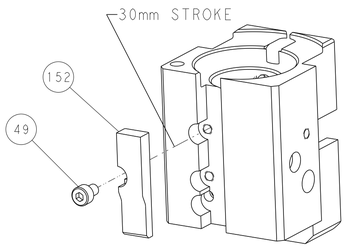

AIR FEED

PACIFIC VERSION

Shown on sheets 3 of 4 & 4 of 4
(Atlantic version shown on sheets 1 of 4 & 2 of 4)

THIS DRAWING IS A CONTROLLED DOCUMENT FOR TYCO ELECTRONICS CORPORATION IT IS SUBJECT TO CHANGE AND THE CONTROLLING ENGINEERING ORGANIZATION SHOULD BE CONTACTED FOR THE LATEST REVISION.

DIMENSIONS: mm

TOLERANCES UNLESS OTHERWISE SPECIFIED:
0 PLC ±-
1 PLC ±-
2 PLC ±-
3 PLC ±-
4 PLC ±-
ANGLES ±-

MATERIAL -
FINISH -

DWN	R KNEPPER	29-JUN-18
CHK	T BROOKENS	29-JUN-18
APVD	C TOPPER	29-JUN-18

TE Connectivity
Harrisburg, PA 17105-3608

NAME: Ocean End Feed Applicator -

PRODUCT SPEC -

APPLICATION SPEC -

WEIGHT -

SIZE	CAGE CODE	DRAWING NO	RESTRICTED TO
A1	00779	C-2150933	-

Customer Accessible Production Drawing | SCALE 1:1 | SHEET 4 OF 4 | REV C

AMP 4805 REV 31MAR2000

SHEETS 1 & 2 ARE NOT REQUIRED FOR PACIFIC VERSION