THIS DRAWING IS UNPUBLISHED. RELEASED FOR PUBLICATION 20
© COPYRIGHT 20 BY TYCO ELECTRONICS CORPORATION. ALL RIGHTS RESERVED.

SET UP GAUGE 2119599-2 | LOC A | DIST 66

REVISIONS

P	LTR	DESCRIPTION	DATE	DWN	APVD
	A	RELEASED	22SEP2017	TB	CT

ATLANTIC VERSION TERMINATOR INTERFACE ADAPTER	PART NUMBER	REVISION	DESCRIPTION	FEED TYPE
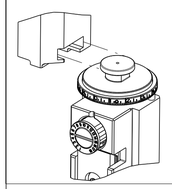	2150838-2	A	FINE CRIMP HEIGHT ADJUST	PNEUMATIC
	2150838-5	A	FINE CRIMP HEIGHT ADJUST	SERVO LATCH PLATE △4
	2150838-6	A	NON-CRIMP HEIGHT ADJUST	SERVO LATCH PLATE △4 △11
	2150838-7	A	FINE CRIMP HEIGHT ADJUST	NONE
	7-2150838-7	A	CRIMP TOOLING KIT	-

APPLICATOR STYLE CONVERSION CHART

CONVERT TO	PART NUMBERS REQUIRED					
-	-	-	-	-	-	-
SERVO LATCH PLATE	2119951-1	1901697-1	8-2150838-5	-	-	2168400-7 (QUANTITY 2)
SMART APPLICATOR	2161326-1	-	8-2150838-4	-	-	-
-	-	-	-	-	-	-
PNEUMATIC FEED	2119950-1	2119792-2	-	2119641-1	-	2063440-1
-	-	-	-	-	-	-
-	-	-	-	-	-	-
-	-	-	-	-	-	-
-	-	-	-	-	-	-

APPLICATOR DATA		
CRIMP	SIZE	TYPE
WIRE	3.05 mm [.120]	F
INSUL	6.35 mm [.250]	O
APPL INSTRUCTIONS 408-10390		

TERMINAL DATA: KET TERMINAL		TE CRIMP SPECIFICATION
TERMINAL NAME: 250 WP (58X) TERMINAL		
WIRE STRIP LENGTH 5.47-6.23 mm [.215-.245 IN]		INSULATION DIAMETER RANGE Ø △12
TERMINAL APPLICATION SPECIFICATION	NONE	- -
	-	- -

TERMINALS APPLIED △10

TE TERMINAL	KET TERMINAL	TE SEAL	KET SEAL	CABLE DIAMETER △12
2318372-1	ST730660-3	2318373-1	MG 680728	Ø2.6-4.1

WIRE SIZE	CRIMP HEIGHT mm [INCH]	CRIMP HEIGHT REFERENCE SETTING △9
3.00mm2	2.14+/-0.05 [.084+/-.002]	4.0
2.50mm2	1.86+/-0.05 [.073+/-.002]	6.9
2.00mm2	1.83+/-0.05 [.072+/-.002]	7.2

△1 RECOMMENDED SPARE PARTS

△2 GREASE BEARING SURFACES LIGHTLY

3. LUBRICATE DAILY PER THE APPLICATOR INSTRUCTION SHEET SUPPLIED WITH THE APPLICATOR.

△4 APPLICATOR SPECIFIC DATA TO BE ENTERED INTO BLANK MEMORY CHIP AT ASSEMBLY. SEE BELOW FOR PART NUMBER:
PNEUMATIC FEED WITH "SMART APPLICATOR" CONVERSION: 8-2150838-4
SERVO FEED WITH "FINE CRIMP HEIGHT ADJUST": 8-2150838-5
SERVO FEED WITH "NON-CRIMP HEIGHT ADJUST": 8-2150838-6

5. ADJUSTMENT OF THE STRIPPER MAY BE REQUIRED WHEN MOVING THE APPLICATOR BETWEEN BENCH AND LEADMAKER APPLICATIONS.

△6 APPLY PART NUMBER 1-23419-5 LOCTITE TO THREADS OF ITEMS 62 & 180.
APPLY PART NUMBER 2-23419-6 LOCTITE TO THREADS OF ITEM 242.
FOR -6 ONLY APPLY PART NUMBER 1-23419-5 LOCTITE TO THREADS OF ITEMS 37 & 180.

△7 GREASE THREADS, GROOVE AND O-RING ON ITEMS 35 & 252.

△8 MAGNET, ITEM 166 MUST BE ORIENTED CORRECTLY IN ORDER TO PROPERLY ACTUATE THE COUNTER.

△9 CRIMP HEIGHT REFERENCE SETTING WAS THE SETTING USED WHEN THE APPLICATOR WAS QUALIFIED AT THE FACTORY. ADJUSTMENT MAY BE NECESSARY WHEN RUNNING APPLICATOR IN THE FIELD.

△10 TERMINAL PITCH NOT COMPATIBLE WITH MECHANICAL FEED.

△11 WHEN ASSEMBLING -6 NON-CRIMP HEIGHT ADJUST APPLICATOR USE SHIM PACK 2119957-2 TO ALIGN APPLICATOR'S MAXIMUM WIRE CRIMP HEIGHT AT NORMAL TERMINATOR SHUT HEIGHT

△12 THIS APPLICATOR APPLIES TERMINAL WITH A SEAL.

*WARNING
ON INSTALLATION, SET WIRE DISC, ITEM 40 TO LARGEST WIRE SIZE SETTING. USE OF SETTINGS BELOW MINIMUM REQUIRED CRIMP HEIGHT SETTING WILL CAUSE DAMAGE TO CRIMP TOOLING.

						ITEM NO	DESCRIPTION	PART NO
△12	-	-	1	-	-	260	APPLICATOR SHIM PACK	2119957-2
△7	-	1	-	1	1	252	O-RING, .676 ID, .070 DIA. MAT.	8-21084-0
	-77	-7	-6	-5	-2	ITEM NO	DESCRIPTION	PART NO

						ITEM NO	DESCRIPTION	PART NO
	-	-	-	-	1	250	PUSH ROD, AIR FEED	2119640-1
	-	-	-	-	1	249	BUSHING, FLANGED	1803259-1
	-	-	-	-	1	248	FEED CAM, AIR FEED	2119641-1
	-	1	-	1	1	247	DETENT PIN	2119798-1
	-	1	-	1	1	246	SPRING, COMPRESSION	1-22279-3
	-	-	1	-	-	245	RAM, AMP STYLE, END FEED, NON-ADJUST	2119759-1
	-	1	1	1	1	244	CAM, SNAIL, INSULATION ADJUSTMENT	2119082-5
	-	1	1	1	1	243	WASHER, WAVE SPRING, CREST-TO-CREST	2079764-1
△6	-	1	1	1	1	242	RETAINER, INSULATION DIAL	2119083-1
	-	-	2	2	-	240	SHCS, LOW HEAD, RoHS, M5 X 10	2168400-7
	-	-	-	-	1	238	AIR FEED MODULE	2063440-1
	-	-	1	1	-	213	TAG,IDENTIFICATION	2119740-2
	-	-	REF	REF	-	183	FEED FINGER ASSEMBLY,EF	1901697-1
△6	-	1	1	1	1	180	STANDOFF,HOLD-DOWN	1-1752354-5
	-	1	1	1	1	177	PIN, SLOTTED SPRING 3.0 X 14.0	6-993111-6
	-	1	1	1	1	176	SPRING, COMPRESSION	8-22280-7
	-	1	1	1	1	175	GUIDE PIN,HOLDDOWN	1752353-2
	-	1	1	1	1	174	GUIDE PIN,HOLDDOWN	1901680-2
	-	-	-	-	2	172	RING, RETAIN, EXTERN, 3/16 CRESCENT	21045-3
	-	1	1	1	1	166	MAGNET, RARE EARTH HIGH ENERGY	994969-1
	-	REF	REF	REF	REF	164	COUNTER, MAGNETIC	994970-2
	-	-	-	-	1	163	SPRING, FEED FINGER	240638-1
	-	-	-	-	1	137	PIN, RETAIN, GRVD, 3/16 X .854	3-23627-7
	-	-	REF	REF	-	135	MEMORY CHIP, PROGRAMMED	SEE NOTE 4
	-	-	1	1	-	133	SERVO FEED LATCH ASM	1633743-1
	-	1	1	1	1	82	SPACER, CRIMPER	455888-9
	-	1	1	1	1	73	DEPRESSOR, WIRE	2119791-5
	-	1	1	1	1	71	DOCUMENTATION PACKAGE	2119956-2
	-	2	2	2	2	70	SCR, SET, FLT PNT, M3 X 10.0	2-18032-2
	-	1	-	-	1	67	TAG,IDENTIFICATION	2119740-1
	-	2	2	2	2	66	SCREW, DRIVE, RH, RoHS, 2 x .188	2168078-1
	-	1	1	1	1	65	HOLDDOWN, TERMINAL	1901681-1
	-	1	-	1	1	63	LIMITER, ADJUSTMENT BOLT	2119793-1
△6	-	3	-	3	3	62	SCR, SET, SOC, CONE PNT, M3 x 4.0	992763-5
	-	1	1	1	1	60	SCR, BHSC, RoHS (M4 X 8)	2079383-4
	-	4	4	4	4	57	SHCS, LOW HEAD, RoHS, M4 X 8	2168400-4
	-	2	2	2	2	56	SCR, SKT HD CAP, RoHS, M4 X 10	1-2168083-0
	-	2	2	2	2	54	NUT, HEX, REG, RoHS, M3	5018030-1
	-	2	2	2	2	53	NUT, LOCK, HEX, TORQUE (M4)	986965-8
	-	1	1	1	1	52	NUT, HEX, REG, RoHS, M3.5	1-5018030-0
	-	-	-	-	1	51	PAWL, EF, AIR	2119792-2
	-	-	-	-	1	49	SCR, SKT HD CAP M4 X 6.0	18023-9
	-	1	1	1	1	46	APPLICATOR BASIC ASSEMBLY, EF	2119655-5
	-	1	-	1	1	44	RAM, AMP STYLE, END FEED	2119369-1
	-	1	1	1	1	41	SCR, BHSC, RoHS (M8 X 25)	2079383-7
	-	1	-	1	1	40	DISC, NUMBERED FA WIRE ADJUSTMENT	2119645-1
	-	1	-	1	1	39	APPLICATOR SHIM PACK	2119957-1
	-	1	1	1	1	38	RAM WASHER, PRECISION	2119644-2
△6	-	1	1	1	1	37	FA HEAD, ATLANTIC STYLE	2119085-1
△7	-	1	-	1	1	35	BOLT, ADJUSTMENT	2119092-1
	-	8	8	8	8	33	WASHER, FLAT, REG M4	1-18028-2
	-	2	2	2	2	31	SCR, SKT HD CAP, RoHS, M4 X 20	2168083-9
	-	2	2	2	2	29	SCR, SKT HD CAP, RoHS, M4 X 10	1-2168083-0
	-	1	1	1	1	27	STRIPPER (MACHINING)	240639-1
	-	2	2	2	2	25	SCR, SKT HD CAP, RoHS, M4 X 30	1-2168083-5
	-	1	1	1	1	24	PLATE, STRIP GUIDE	1752371-5
	-	2	2	2	2	22	SPRING, COMPRESSION	2-22281-3
	-	1	1	1	1	20	DRAG	1803292-4
	-	2	2	2	2	18	GUIDE, LOWER STRIP	1901259-6
	-	4	4	4	4	17	SCR, BHSC, RoHS (M6 X 12)	1-2079383-1
	-	1	1	1	1	16	SPACER	3-240641-3
	-	1	1	1	1	13	SPACER,HOLD-DOWN	1752360-1
△1	-	1	1	1	1	11	PLATE, REAR SHEAR	240644-1
	-	-	-	-	-	10	-	-
△1	-	1	1	1	1	9	PLATE, FRONT SHEAR	690482-5
△1	1	1	1	1	1	8	ANVIL, COMBINATION	1976995-7
△1	-	1	1	1	1	7	BLADE, SLUG	2217206-7
	-	-	-	-	-	6	-	-
	-	1	1	1	1	5	SPACER	240641-1
	-	1	1	1	1	4	BLOCK, FL CRIMPER SPACER	238009-3
△1	1	1	1	1	1	3	CRIMPER, INSULATION O PREMIUM	2-2119784-7
	-	1	1	1	1	2	SPACER, CRIMPER	455888-5
△1	1	1	1	1	1	1	CRIMPER, WIRE .120 "F" PREMIUM	2-456409-8
	-77	-7	-6	-5	-2	ITEM NO	DESCRIPTION	PART NO

ATLANTIC VERSION
Shown on sheets 1 of 4 & 2 of 4
(Pacific version shown on sheets 3 of 4 & 4 of 4)

THIS DRAWING IS A CONTROLLED DOCUMENT FOR TYCO ELECTRONICS CORPORATION IT IS SUBJECT TO CHANGE AND ITS CONTROL NO ENTERPRISE ORGANIZATION SHOULD BE CONTACTED FOR THE LATEST REVISION

DIMENSIONS: mm
TOLERANCES UNLESS OTHERWISE SPECIFIED: 0 PLC ±- 1 PLC ±- 2 PLC ±- 3 PLC ±- 4 PLC ±- ANGLES ±-
MATERIAL - -
FINISH - -

DWN	K.HUANG	31AUG2017
CHK	K.HUANG	31AUG2017
APVD	L.ZHANG	31AUG2017
PRODUCT SPEC	-	
APPLICATION SPEC	-	
WEIGHT	-	

TE Connectivity
Harrisburg, PA 17105-3608

NAME: Ocean End Feed Applicator -

SIZE	CAGE CODE	DRAWING NO	RESTRICTED TO
A1	00779	C-2150838	-

Customer Accessible Production Drawing | SCALE 1:1 | SHEET 1 OF 4 | REV A

SHEETS 3 & 4 ARE NOT REQUIRED FOR ATLANTIC VERSION

THIS DRAWING IS UNPUBLISHED. RELEASED FOR PUBLICATION 20
© COPYRIGHT 20 BY TYCO ELECTRONICS CORPORATION. ALL RIGHTS RESERVED.

LOC	DIST
A	66

REVISIONS

P	LTR	DESCRIPTION	DATE	DWN	APVD
	-	SEE SHEET 1	-	-	-

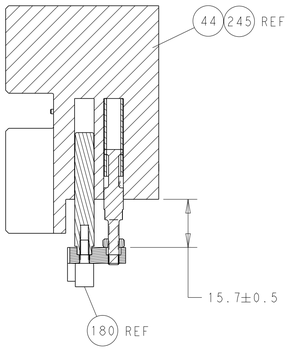

HOLDDOWN SET-UP

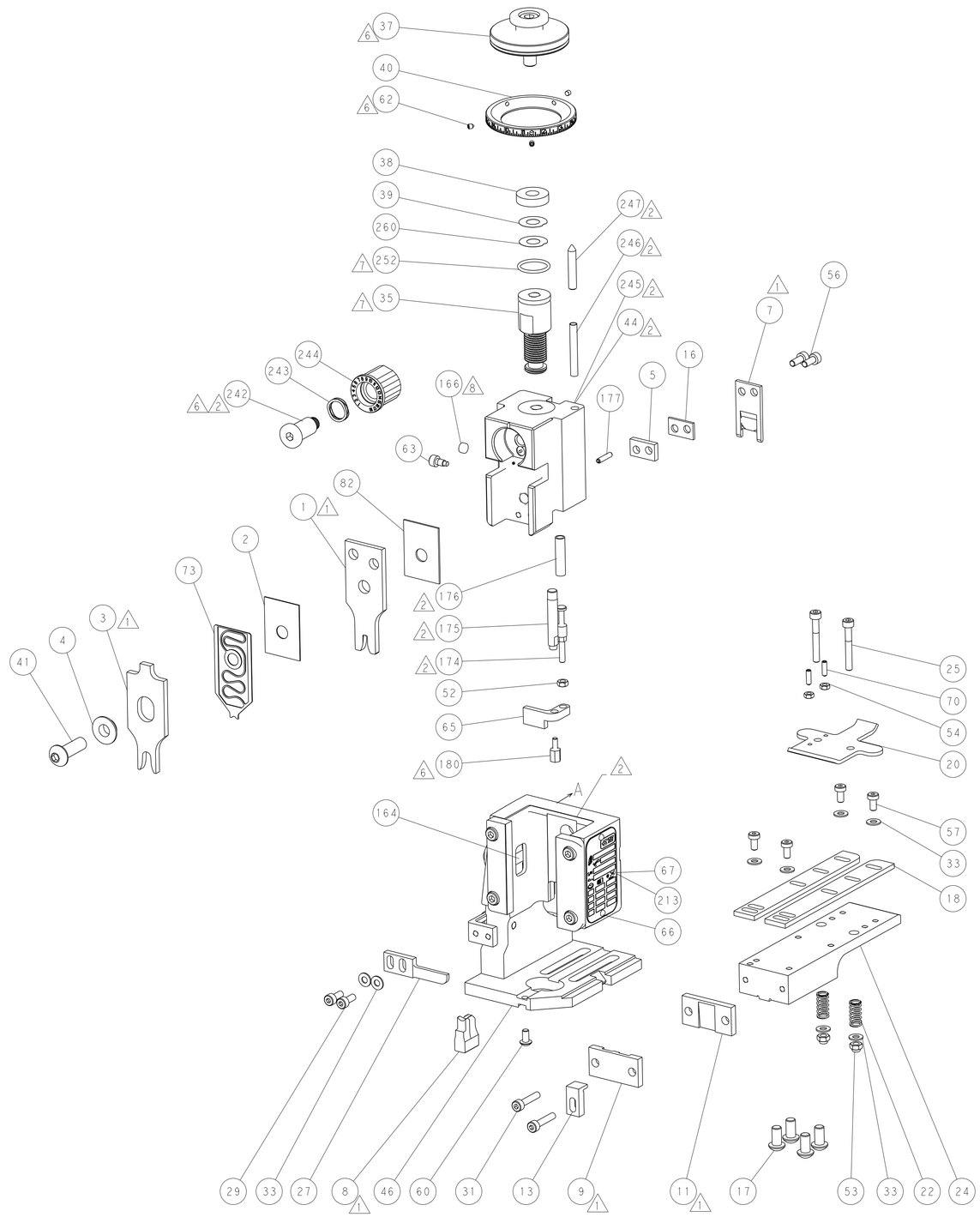

FEED TYPE

PNEUMATIC

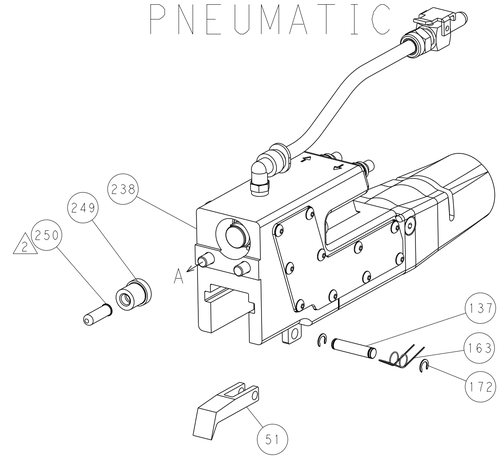

SERVO LATCH PLATE

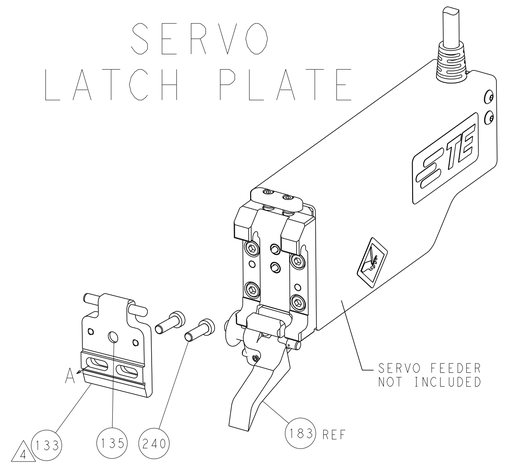

CAM POSITION

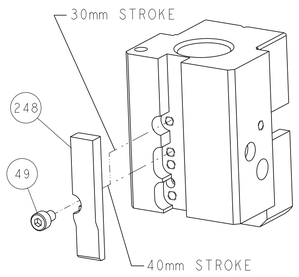

AIR FEED

ATLANTIC VERSION

Shown on sheets 1 of 4 & 2 of 4

(Pacific version shown on sheets 3 of 4 & 4 of 4)

THIS DRAWING IS A CONTROLLED DOCUMENT FOR TYCO ELECTRONICS CORPORATION IT IS SUBJECT TO CHANGE AND THE CONTROLLING ENGINEERING ORGANIZATION SHOULD BE CONTACTED FOR THE LATEST REVISION.

DIMENSIONS: mm

TOLERANCES UNLESS OTHERWISE SPECIFIED:
0 PLC ±-
1 PLC ±-
2 PLC ±-
3 PLC ±-
4 PLC ±-
ANGLES ±-

MATERIAL -

FINISH -

DWN	K HUANG	31AUG2017
CHK	K HUANG	31AUG2017
APVD	L ZHANG	31AUG2017
PRODUCT SPEC	-	
APPLICATION SPEC	-	
WEIGHT	-	

TE Connectivity
Harrisburg, PA 17105-3608

NAME: Ocean End Feed Applicator -

SIZE	CAGE CODE	DRAWING NO	RESTRICTED TO
A1	00779	C-2150838	-

Customer Accessible Production Drawing | SCALE 1:1 | SHEET 2 OF 4 | REV A

SHEETS 3 & 4 ARE NOT REQUIRED FOR ATLANTIC VERSION

THIS DRAWING IS UNPUBLISHED. RELEASED FOR PUBLICATION 20
© COPYRIGHT 20 BY TYCO ELECTRONICS CORPORATION. ALL RIGHTS RESERVED.

SET UP GAUGE 2119599-2 | LOC A | DIST 66

REVISIONS

P	LTR	DESCRIPTION	DATE	DWN	APVD
	-	SEE SHEET 1	-	-	-

PACIFIC VERSION TERMINATOR INTERFACE ADAPTER	PART NUMBER	REVISION	DESCRIPTION	FEED TYPE
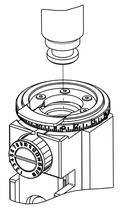	2-2150838-2	A	FINE CRIMP HEIGHT ADJUST	PNEUMATIC
	2-2150838-5	A	FINE CRIMP HEIGHT ADJUST	SERVO LATCH PLATE 4
	2-2150838-7	A	FINE CRIMP HEIGHT ADJUST	NONE
	7-2150838-7	A	CRIMP TOOLING KIT	-

APPLICATOR STYLE CONVERSION CHART

CONVERT TO	PART NUMBERS REQUIRED					
-	-	-	-	-	-	-
SERVO LATCH PLATE	2119951-1	1901697-1	8-2150838-5	-	-	2168400-7 (QUANTITY 2)
SMART APPLICATOR	2161326-1	-	8-2150838-4	-	-	-
-	-	-	-	-	-	-
PNEUMATIC FEED	2119950-1	2119792-2	-	2119641-2	-	2063440-1
-	-	-	-	-	-	-
-	-	-	-	-	-	-

APPLICATOR DATA		
CRIMP	SIZE	TYPE
WIRE	3.05 mm [.120]	F
INSUL	6.35 mm [.250]	O
APPL INSTRUCTIONS 408-10390		

TERMINAL DATA: KET TERMINAL		TE CRIMP SPECIFICATION
TERMINAL NAME: 250 WP (58X) TERMINAL		
WIRE STRIP LENGTH 5.47-6.23 mm [.215-.245 IN]	INSULATION DIAMETER RANGE Ø 12	
TERMINAL APPLICATION SPECIFICATION	NONE	- -
	-	- -

TERMINALS APPLIED 10

TE TERMINAL	KET TERMINAL	TE SEAL	KET SEAL	CABLE DIAMETER 12
2318372-1	ST730660-3	2318373-1	MG 680728	Ø2.6-4.1

WIRE SIZE	CRIMP HEIGHT mm [INCH]	CRIMP HEIGHT REFERENCE SETTING 9
3.00mm2	2.14+/-0.05 [.084+/-.002]	4.0
2.50mm2	1.86+/-0.05 [.073+/-.002]	6.9
2.00mm2	1.83+/-0.05 [.072+/-.002]	7.2

1 RECOMMENDED SPARE PARTS

2 GREASE BEARING SURFACES LIGHTLY

3. LUBRICATE DAILY PER THE APPLICATOR INSTRUCTION SHEET SUPPLIED WITH THE APPLICATOR.

4 APPLICATOR SPECIFIC DATA TO BE ENTERED INTO BLANK MEMORY CHIP AT ASSEMBLY. SEE BELOW FOR PART NUMBER:
PNEUMATIC FEED WITH "SMART APPLICATOR" CONVERSION: 8-2150838-4
SERVO FEED WITH "FINE CRIMP HEIGHT ADJUST": 8-2150838-5

5. ADJUSTMENT OF THE STRIPPER MAY BE REQUIRED WHEN MOVING THE APPLICATOR BETWEEN BENCH AND LEADMAKER APPLICATIONS.

6 APPLY PART NUMBER 1-23419-5 LOCTITE TO THREADS OF ITEMS 62 & 180. APPLY PART NUMBER 2-23419-6 LOCTITE TO THREADS OF ITEM 242.

7 GREASE THREADS, GROOVE AND O-RING ON ITEMS 139 & 153.

8 MAGNET, ITEM 166 MUST BE ORIENTED CORRECTLY IN ORDER TO PROPERLY ACTUATE THE COUNTER.

9 CRIMP HEIGHT REFERENCE SETTING WAS THE SETTING USED WHEN THE APPLICATOR WAS QUALIFIED AT THE FACTORY. ADJUSTMENT MAY BE NECESSARY WHEN RUNNING APPLICATOR IN THE FIELD.

10 TERMINAL PITCH NOT COMPATIBLE WITH MECHANICAL FEED.

11 THE RECOMMENDED SET-UP FOR END FEED APPLICATORS IS POST-FEED WITH ITEM 2119653-1. THE APPLICATOR CAN BE CONFIGURED FOR PRE-FEED WITH ITEM 2119652-1 BUT MAY ENCOUNTER PROBLEMS WITH SOME APPLICATIONS. FEED ISSUES OR TERMINAL JAMMING MAY OCCUR IN THE PRE-FEED CONFIGURATION.

12 THIS APPLICATOR APPLIES TERMINAL WITH A SEAL.

*WARNING
ON INSTALLATION, SET WIRE DISC, ITEM 40 TO LARGEST WIRE SIZE SETTING. USE OF SETTINGS BELOW MINIMUM REQUIRED CRIMP HEIGHT SETTING WILL CAUSE DAMAGE TO CRIMP TOOLING.

PACIFIC VERSION
Shown on sheets 3 of 4 & 4 of 4
(Atlantic version shown on sheets 1 of 4 & 2 of 4)

-	1	1	1	2119782-1	FINE ADJUST HEAD ASM, PACIFIC STYLE	251
-	-	-	1	2119640-1	PUSH ROD, AIR FEED	250
-	-	-	1	1803259-1	BUSHING, FLANGED	249
-	1	1	1	1-22279-3	SPRING, COMPRESSION	246
-	1	1	1	2119082-5	CAM, SNAIL, INSULATION ADJUSTMENT	244
-	1	1	1	2079764-1	WASHER, WAVE SPRING, CREST-TO-CREST	243
6 -	1	1	1	2119083-1	RETAINER, INSULATION DIAL	242
-	-	2	-	2168400-7	SHCS, LOW HEAD, RoHS, M5 X 10	240
-	-	-	1	2063440-1	AIR FEED MODULE	238
-	-	1	-	2119740-2	TAG,IDENTIFICATION	213
-	4	4	4	2079383-9	SCR, BHSC, RoHS (M6 X 20)	186
-	-	REF	-	1901697-1	FEED FINGER ASSEMBLY,EF	183
6 -	1	1	1	1-1752354-5	STANDOFF,HOLD-DOWN	180
-	1	1	1	6-993111-6	PIN, SLOTTED SPRING 3.0 X 14.0	177
-	1	1	1	8-22280-7	SPRING, COMPRESSION	176
-	1	1	1	1752353-2	GUIDE PIN,HOLDDOWN	175
-	1	1	1	1901680-2	GUIDE PIN,HOLDDOWN	174
-	-	-	2	21045-3	RING, RETAIN, EXTERN, 3/16 CRESCENT	172
-	1	1	1	994969-1	MAGNET, RARE EARTH HIGH ENERGY	166
-	REF	REF	REF	994970-2	COUNTER, MAGNETIC	164
-	-	-	1	240638-1	SPRING, FEED FINGER	163
7 -	1	1	1	8-21084-1	O-RING, .801 ID, .070 DIA. MAT.	153
-	-	-	1	2119641-2	FEED CAM, AIR FEED	152
-	1	1	1	2119798-2	DETENT PIN	145
-	1	1	1	2079383-8	SCR, BHSC, RoHS (M4 X 16)	144
-	1	1	1	2119655-6	APPLICATOR BASIC ASSEMBLY, EF	141
-	1	1	1	2119651-1	RAM, ASIAN STYLE, END FEED	140
7 -	1	1	1	2119092-2	BOLT, ADJUSTMENT	139
-	-	-	1	3-23627-7	PIN, RETAIN, GRVD, 3/16 X .854	137
-	-	REF	-	SEE NOTE 4	MEMORY CHIP, PROGRAMMED	135
-	-	1	-	1633743-1	SERVO FEED LATCH ASM	133
-	1	1	1	455888-9	SPACER, CRIMPER	82
-	1	1	1	2119791-5	DEPRESSOR, WIRE	73
-	1	1	1	2119956-2	DOCUMENTATION PACKAGE	71
-	2	2	2	2-18032-2	SCR, SET, FLT PNT, M3 X 10.0	70
-	1	-	1	2119740-1	TAG,IDENTIFICATION	67
-	2	2	2	2168078-1	SCREW, DRIVE, RH, RoHS, 2 x .188	66
-	1	1	1	1901681-1	HOLDDOWN, TERMINAL	65
-	1	1	1	2119793-1	LIMITER, ADJUSTMENT BOLT	63
6 -	3	3	3	992763-5	SCR, SET, SOC, CONE PNT, M3 x 4.0	62
-	4	4	4	2168400-4	SHCS, LOW HEAD, RoHS, M4 X 8	57
-	2	2	2	1-2168083-0	SCR, SKT HD CAP, RoHS, M4 X 10	56
-	2	2	2	5018030-1	NUT, HEX, REG, RoHS, M3	54
-	2	2	2	986965-8	NUT, LOCK, HEX, TORQUE (M4)	53
-	1	1	1	1-5018030-0	NUT, HEX, REG, RoHS, M3.5	52
-	-	-	1	2119792-2	PAWL, EF, AIR	51
-	-	-	1	18023-9	SCR, SKT HD CAP M4 X 6.0	49
-	1	1	1	2079383-7	SCR, BHSC, RoHS (M8 X 25)	41
-	1	1	1	2119645-1	DISC, NUMBERED FA WIRE ADJUSTMENT	40
-	1	1	1	2119957-1	APPLICATOR SHIM PACK	39
-	1	1	1	2119644-2	RAM WASHER, PRECISION	38
-	8	8	8	1-18028-2	WASHER, FLAT, REG M4	33
-	2	2	2	2168083-9	SCR, SKT HD CAP, RoHS, M4 X 20	31
-	2	2	2	1-2168083-0	SCR, SKT HD CAP, RoHS, M4 X 10	29
-	1	1	1	240639-1	STRIPPER (MACHINING)	27
-	2	2	2	1-2168083-5	SCR, SKT HD CAP, RoHS, M4 X 30	25
-	1	1	1	1752371-5	PLATE, STRIP GUIDE	24
-	2	2	2	2-22281-3	SPRING, COMPRESSION	22
-	1	1	1	1803292-4	DRAG	20
-	2	2	2	1901259-6	GUIDE, LOWER STRIP	18
-	1	1	1	3-240641-3	SPACER	16
-	1	1	1	1752360-1	SPACER,HOLD-DOWN	13
1 -	1	1	1	240644-1	PLATE, REAR SHEAR	11
-	-	-	-	-	-	10
1 -	1	1	1	690482-5	PLATE, FRONT SHEAR	9
1	1	1	1	1976995-7	ANVIL, COMBINATION	8
1 -	1	1	1	2217206-7	BLADE, SLUG	7
-	-	-	-	-	-	6
-	1	1	1	240641-1	SPACER	5
-	1	1	1	238009-3	BLOCK, FL CRIMPER SPACER	4
1	1	1	1	2-2119784-7	CRIMPER, INSULATION O PREMIUM	3
-	1	1	1	455888-5	SPACER, CRIMPER	2
1	1	1	1	2-456409-8	CRIMPER, WIRE .120 "F" PREMIUM	1
-77-	27-	25-	22	PART NO	DESCRIPTION	ITEM NO

THIS DRAWING IS A CONTROLLED DOCUMENT FOR TYCO ELECTRONICS CORPORATION IT IS SUBJECT TO CHANGE. CONTACT TYCO ELECTRONICS ORGANIZATION SHOULD BE CONTACTED FOR THE LATEST REVISION.

DIMENSIONS: mm

TOLERANCES UNLESS OTHERWISE SPECIFIED:
0 PLC ±-
1 PLC ±-
2 PLC ±-
3 PLC ±-
4 PLC ±-
ANGLES ±-

MATERIAL -
FINISH -

DWN	K.HUANG	31AUG2017
CHK	K.HUANG	31AUG2017
APVD	L.ZHANG	31AUG2017
PRODUCT SPEC	-	
APPLICATION SPEC	-	
WEIGHT	-	

TE Connectivity
Harrisburg, PA 17105-3608

NAME: Ocean End Feed Applicator -

SIZE	CAGE CODE	DRAWING NO	RESTRICTED TO
A1	00779	C-2150838	-

Customer Accessible Production Drawing | SCALE 1:1 | SHEET 3 OF 4 | REV A

SHEETS 1 & 2 ARE NOT REQUIRED FOR PACIFIC VERSION

THIS DRAWING IS UNPUBLISHED. RELEASED FOR PUBLICATION 20
© COPYRIGHT 20 BY TYCO ELECTRONICS CORPORATION. ALL RIGHTS RESERVED.

LOC	DIST
A	66

REVISIONS

P	LTR	DESCRIPTION	DATE	DWN	APVD
	-	SEE SHEET 1	-	-	-

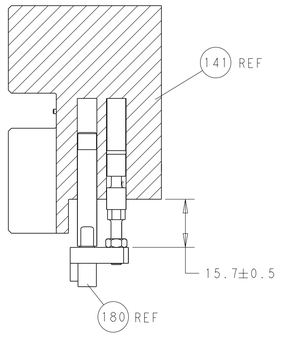

HOLDDOWN SET-UP

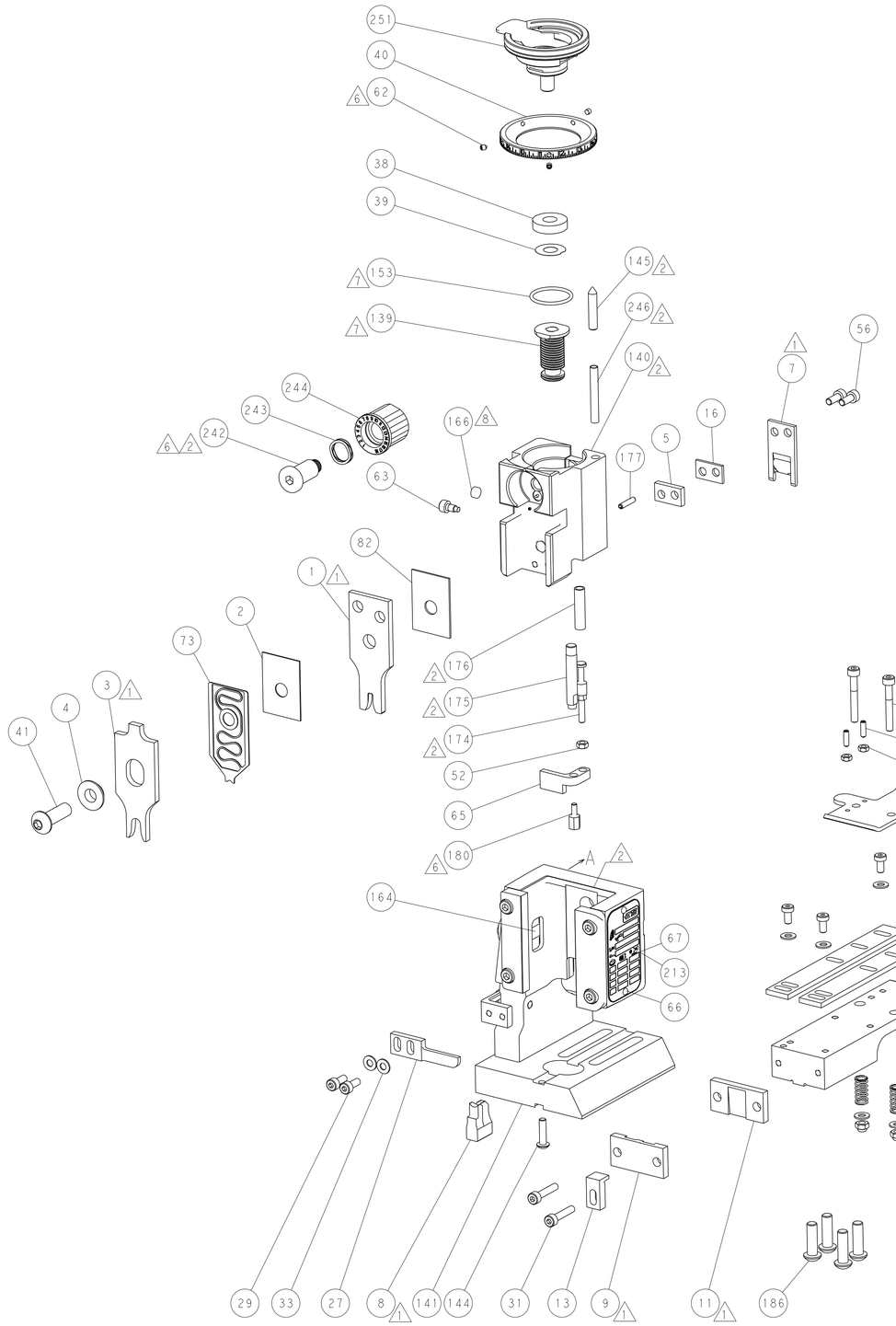

FEED TYPE

PNEUMATIC

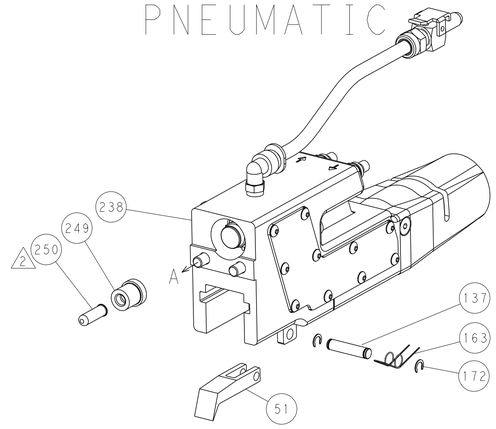

SERVO
LATCH PLATE

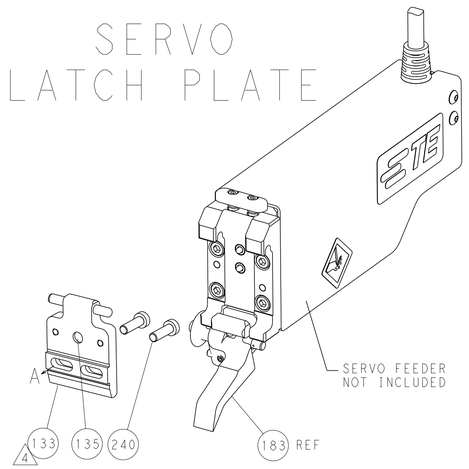

CAM POSITION

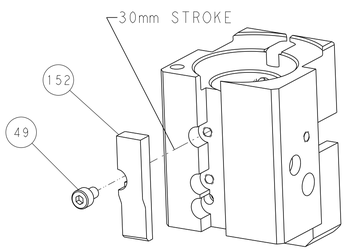

AIR FEED

PACIFIC VERSION
Shown on sheets 3 of 4 & 4 of 4
(Atlantic version shown on sheets 1 of 4 & 2 of 4)

THIS DRAWING IS A CONTROLLED DOCUMENT FOR TYCO ELECTRONICS CORPORATION IT IS SUBJECT TO CHANGE AND THE CONTROLLING ENGINEERING ORGANIZATION SHOULD BE CONTACTED FOR THE LATEST REVISION.

DIMENSIONS: mm

TOLERANCES UNLESS OTHERWISE SPECIFIED:
0 PLC ±-
1 PLC ±-
2 PLC ±-
3 PLC ±-
4 PLC ±-
ANGLES ±-

MATERIAL - -
FINISH - -

DWN	K.HUANG	31AUG2017
CHK	K.HUANG	31AUG2017
APVD	L.ZHANG	31AUG2017
PRODUCT SPEC	-	
APPLICATION SPEC	-	
WEIGHT	-	

TE Connectivity
Harrisburg, PA 17105-3608

NAME: Ocean End Feed Applicator -

SIZE	CAGE CODE	DRAWING NO	RESTRICTED TO
A1	00779	C-2150838	-

Customer Accessible Production Drawing | SCALE 1:1 | SHEET 4 OF 4 | REV A

SHEETS 1 & 2 ARE NOT REQUIRED FOR PACIFIC VERSION