THIS DRAWING IS UNPUBLISHED. RELEASED FOR PUBLICATION 20
© COPYRIGHT 20 BY TYCO ELECTRONICS CORPORATION. ALL RIGHTS RESERVED.

LOC	DIST
A	66

REVISIONS

P	LTR	DESCRIPTION	DATE	DWN	APVD
	1	DEVELOPMENT	21APR2016	KH	LZ
	A	RELEASED	01JUN2016	MEH	GB
	B	ECR-19-007511	10MAY2019	TB	CT
	C	ECR-24-222114	26SEP2024	LG	TE

PART NUMBER	REVISION	DESCRIPTION	FEED TYPE
2150666-1	C	FINE CRIMP HEIGHT ADJUST	MECHANICAL
2150666-2	C	FINE CRIMP HEIGHT ADJUST	PNEUMATIC
7-2150666-7	A	CRIMP TOOLING KIT	-

ATLANTIC VERSION TERMINATOR INTERFACE ADAPTER

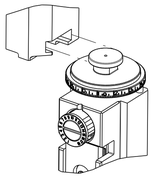

APPLICATOR DATA		
CRIMP	SIZE	TYPE
WIRE	1.57 mm [.062]	F
INSUL	2.29 mm [.090]	O
APPL INSTRUCTIONS 408-35043		

TERMINAL DATA: TE TERMINAL		TE CRIMP SPECIFICATION
TERMINAL NAME: TERMINAL, SPADE		
WIRE STRIP LENGTH 3.11-3.87 mm [.123-.153 IN]	INSULATION DIAMETER RANGE ∅0.89-1.14 mm [.035-.045 IN]	
TERMINAL APPLICATION SPECIFICATION	114-2084	-
	-	-

TERMINALS APPLIED

TE TERMINAL	TE TERMINAL	TE TERMINAL	TE TERMINAL
350502-1	350502-2		

WIRE SIZE	CRIMP HEIGHT mm [INCH]	CRIMP HEIGHT REFERENCE SETTING (4)
22 AWG	1.12+/-0.05 [.044+/-.002]	6.5
24 AWG	1.07+/-0.05 [.042+/-.002]	7.1
26 AWG	1.02+/-0.05 [.040+/-.002]	7.6
28 AWG	0.99+/-0.05 [.039+/-.002]	7.8

(1) RECOMMENDED SPARE PARTS

(2) REFER TO SUPPLIED INSTRUCTION SHEET FOR CLEANING, LUBRICATION AND STORAGE OF APPLICATOR.

(3) APPLY PART NUMBER 2-23419-6 LOCTITE TO THREADS OF ITEM 242. APPLY PART NUMBER 1-23419-5 LOCTITE TO THREADS OF ITEM 180.

(4) CRIMP HEIGHT REFERENCE SETTING WAS THE SETTING USED WHEN THE APPLICATOR WAS QUALIFIED AT THE FACTORY. ADJUSTMENT MAY BE NECESSARY WHEN RUNNING APPLICATOR IN THE FIELD.

5. UNLESS SPECIFIED OTHERWISE TORQUE VALUES SHALL BE USED PER DOCUMENT, 101-35000.

*WARNING
ON INSTALLATION, SET WIRE DISC TO CRIMP HEIGHT REFERENCE SETTING FOR LARGEST WIRE SIZE. CRIMP HEIGHT REFERENCE SETTINGS GREATER THAN THE VALUE SHOWN MAY CAUSE DAMAGE TO THE CRIMP TOOLING. REFER TO THE INSTRUCTION SHEET FOR PROPER SETUP AND ADJUSTMENTS.

	-77	-2	-1	PART NO	DESCRIPTION	ITEM NO
	-	1	-	2119641-1	FEED CAM, AIR FEED	248
	-	1	1	2119082-5	CAM, SNAIL, INSULATION ADJUSTMENT	244
	-	1	1	2079764-1	WASHER, WAVE SPRING, CREST-TO-CREST	243
(3)	-	1	1	2119083-1	RETAINER, INSULATION DIAL	242
	-	-	1	2119580-1	MECHANICAL FEED ASSEMBLY	239
	-	1	-	2844940-3	AIR FEED MODULE	238
	-	1	1	1-18028-0	WASHER, FLAT, REG M8	192
(3)	-	1	1	1752354-1	STANDOFF,HOLD-DOWN	180
	-	1	1	6-993111-6	PIN, SLOTTED SPRING 3.0 X 14.0	177
	-	1	1	8-22280-7	SPRING, COMPRESSION	176
	-	1	1	1752353-2	GUIDE PIN,HOLDDOWN	175
	-	1	1	1901680-2	GUIDE PIN,HOLDDOWN	174
	-	REF	REF	994970-2	COUNTER, MAGNETIC	164
	-	1	1	455888-4	SPACER, CRIMPER -	82
	-	1	1	2119791-5	DEPRESSOR, WIRE	73
	-	1	1	1803607-4	DOCUMENTATION PACKAGE	71
	-	2	2	2-18032-2	SCR, SET, FLT PNT, M3 X 10.0	70
	-	1	1	2119740-1	TAG,IDENTIFICATION	67
	-	2	2	2168078-1	SCREW, DRIVE, RH, RoHS, 2 x .188	66
	-	1	1	1-1901681-8	HOLDDOWN, TERMINAL	65
	-	1	1	2168083-2	SCR, SKT HD CAP, RoHS, M4 X 8.0	60
	-	1	1	5-18022-5	SCR, HEX HD CAP, M4 X 6.0	59
	-	-	1	2063961-1	FEED FINGER	58
	-	4	4	2168400-4	SHCS, LOW HEAD, RoHS, M4 X 8	57
	-	2	2	2168083-2	SCR, SKT HD CAP, RoHS, M4 X 8.0	56
	-	2	2	5018030-1	NUT, HEX, REG, RoHS, M3	54
	-	2	2	986965-8	NUT, LOCK, HEX, TORQUE (M4)	53
	-	1	1	1-5018030-0	NUT, HEX, REG, RoHS, M3.5	52
	-	1	-	2063961-1	FEED FINGER	51
	-	1	2	18023-9	SCR, SKT HD CAP M4 X 6.0	49
	-	-	1	2119652-1	FEED CAM, PRE FEED	48
	-	-	1	2119653-1	FEED CAM, POST FEED	47
	-	1	1	2119655-5	APPLICATOR BASIC ASSEMBLY, EF	46
	-	1	1	1803517-1	RAM ASSEMBLY, EF ATLANTIC	44
	-	1	1	1803602-1	SCR, BHSC, RoHS (M8 X 25)	41
	-	8	8	1-18028-2	WASHER, FLAT, REG M4	33
	-	2	2	2168083-8	SCR, SKT HD CAP, RoHS, M4 X 16	31
	-	2	2	2168083-2	SCR, SKT HD CAP, RoHS, M4 X 8.0	29
	-	1	1	240639-4	STRIPPER (MACHINING)	27
	-	2	2	1-2168083-5	SCR, SKT HD CAP, RoHS, M4 X 30	25
	-	1	1	1752371-5	PLATE, STRIP GUIDE	24
	-	2	2	2-22281-3	SPRING, COMPRESSION	22
	-	1	1	1803292-4	DRAG	20
	-	1	1	1901696-9	STRIP GUIDE, REAR	19
	-	1	1	1901695-9	STRIP GUIDE, FRONT	18
	-	4	4	1-2079383-1	SCR, BHSC, RoHS (M6 X 12)	17
(1)	-	1	1	240644-9	PLATE, REAR SHEAR	11
	-	2	2	1-240645-2	SPACER, SHEAR PLATE	10
(1)	-	1	1	240642-1	PLATE, FRONT SHEAR	9
(1)	1	1	1	2-1803074-2	ANVIL, COMBINATION, END FEED	8
(1)	-	1	1	7-240651-2	BLADE, SLUG	7
	-	-	-	-	-	6
	-	1	1	240641-8	SPACER	5
	-	1	1	238011-9	BLOCK, CRIMPER SPACER	4
(1)	1	1	1	4-1803019-0	CRIMPER, INSULATION O	3
	-	1	1	455888-4	SPACER, CRIMPER -	2
(1)	1	1	1	1-1803224-0	CRIMPER, WIRE	1

THIS DRAWING IS A CONTROLLED DOCUMENT FOR TYCO ELECTRONICS CORPORATION. IT IS SUBJECT TO CHANGE AND THE CONTRACTING ENGINEERING ORGANIZATION SHOULD BE CONTACTED FOR THE LATEST REVISION.

DIMENSIONS: mm

TOLERANCES UNLESS OTHERWISE SPECIFIED:
0 PLC ±-
1 PLC ±-
2 PLC ±-
3 PLC ±-
4 PLC ±-
ANGLES ±-

MATERIAL - -
FINISH - -

DWN K.HUANG 21APR2016
CHK L.ZHANG 21APR2016
APVD L.ZHANG 21APR2016
PRODUCT SPEC -
APPLICATION SPEC -
WEIGHT -

TE Connectivity
Harrisburg, PA 17105-3608

NAME Ocean End Feed Applicator -

SIZE	CAGE CODE	DRAWING NO	RESTRICTED TO
A1	00779	C-2150666	-

Customer Accessible Production Drawing | SCALE 1:1 | SHEET 1 OF 4 | REV C

AMP 4805 REV 31MAR2000

SHEETS 3 & 4 ARE NOT REQUIRED FOR ATLANTIC VERSION

THIS DRAWING IS UNPUBLISHED. RELEASED FOR PUBLICATION 20
© COPYRIGHT 20 BY TYCO ELECTRONICS CORPORATION. ALL RIGHTS RESERVED.

LOC	DIST
A	66

REVISIONS

P	LTR	DESCRIPTION	DATE	DWN	APVD
	-	SEE SHEET 1	-	-	-

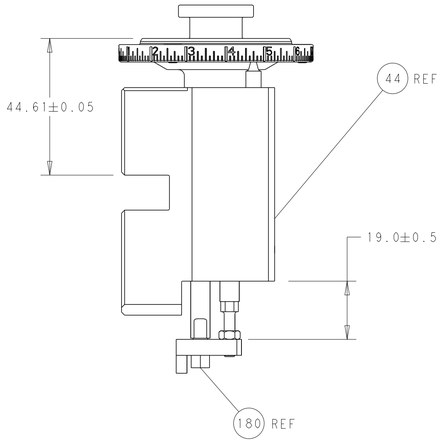

RAM AND HOLDDOWN SET-UP

FEED TYPE MECHANICAL

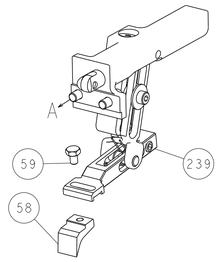

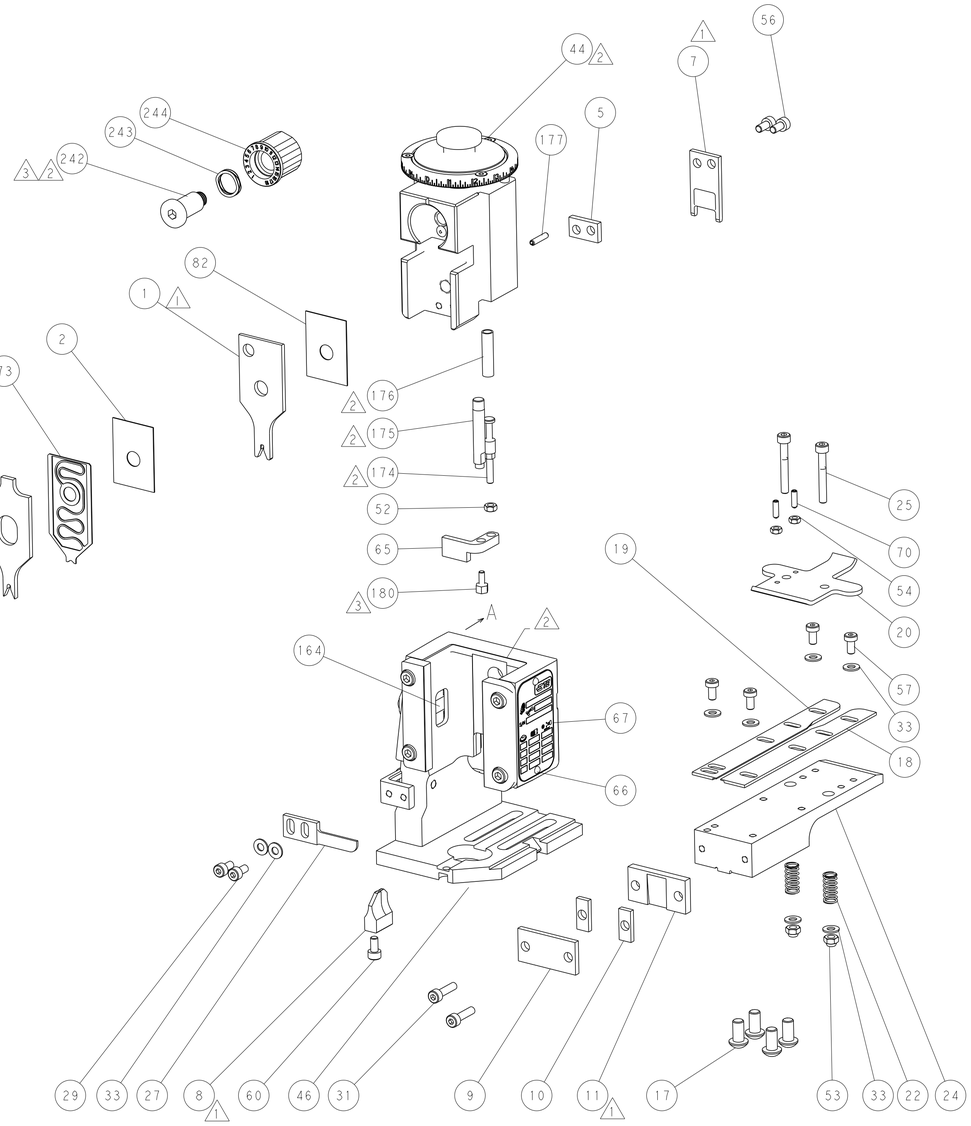

PNEUMATIC

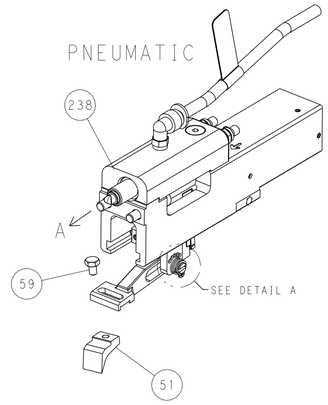

FEED SPRING SETTING POSITION

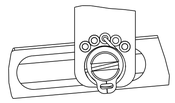

DETAIL A

CAM POSITIONS

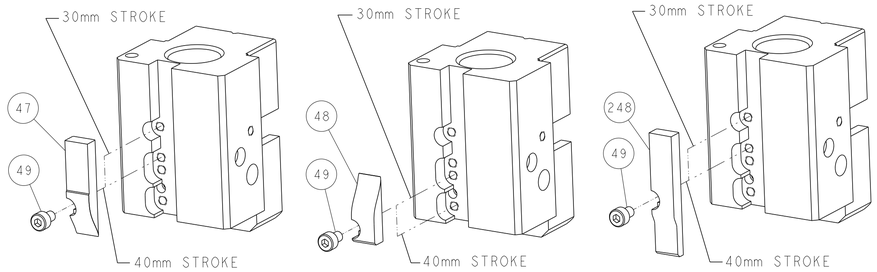

DWN K.HUANG	21APR2016	TE Connectivity Harrisburg, PA 17105-3608	
CHK L.ZHANG	21APR2016		
APVD L.ZHANG	21APR2016	NAME Ocean End Feed Applicator -	
PRODUCT SPEC -			
APPLICATION SPEC -		SIZE A1 / CAGE CODE 00779 / DRAWING NO C-2150666	RESTRICTED TO -
WEIGHT -		Customer Accessible Production Drawing	SCALE 1:1 / SHEET 2 OF 4 / REV C

DIMENSIONS: mm

TOLERANCES UNLESS OTHERWISE SPECIFIED:
0 PLC ±-
1 PLC ±-
2 PLC ±-
3 PLC ±-
4 PLC ±-
ANGLES ±-

MATERIAL - -
FINISH - -

THIS DRAWING IS A CONTROLLED DOCUMENT FOR TYCO ELECTRONICS CORPORATION. IT IS SUBJECT TO CHANGE AND THE CONTROLLING ENGINEERING ORGANIZATION SHOULD BE CONTACTED FOR THE LATEST REVISION.

SHEETS 3 & 4 ARE NOT REQUIRED FOR ATLANTIC VERSION