THIS DRAWING IS UNPUBLISHED. RELEASED FOR PUBLICATION 20
© COPYRIGHT 20 BY TYCO ELECTRONICS CORPORATION. ALL RIGHTS RESERVED.

LOC	DIST
A	66

REVISIONS

P	LTR	DESCRIPTION	DATE	DWN	APVD
	A1	ECR-16-015151	31OCT2016	RS	LZ
	B	ECR-18-018134	20NOV2018	MZ	KZ
	B1	ECR-19-006117	16APR2019	FL	GB
	C	ECR-24-222373	01OCT2024	AB	TE

PART NUMBER	REVISION	DESCRIPTION	FEED TYPE
2150636-1	C	FINE CRIMP HEIGHT ADJUST	MECHANICAL
2150636-2	C	FINE CRIMP HEIGHT ADJUST	PNEUMATIC
7-2150636-7	A	CRIMP TOOLING KIT	-

ATLANTIC VERSION TERMINATOR
INTERFACE ADAPTER

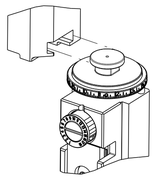

APPLICATOR DATA		
CRIMP	SIZE	TYPE
WIRE	1.57 mm [.062]	F
INSUL	2.29 mm [.090]	OV
APPL INSTRUCTIONS 408-35043		

TERMINAL DATA: TE TERMINAL		TE CRIMP SPECIFICATION
TERMINAL NAME: FASTON .110 SERIES		
WIRE STRIP LENGTH 4.40-5.16 mm [.173-.203 IN]	INSULATION DIAMETER RANGE ∅1.20-1.90 mm [.047-.075 IN]	
TERMINAL APPLICATION SPECIFICATION	114-2036	- -
	-	- -

TERMINALS APPLIED

TE TERMINAL	TE TERMINAL	TE TERMINAL	TE TERMINAL
140825-1	140825-2	42068-1	42068-2
42236-1	60118-1	60118-3	60118-4
60118-5	60197-1	60197-2	60197-3
60415-1	60415-2	60415-6	60577-1
60577-2	140717-1	140717-2	140717-4
140717-5	140717-6	140717-7	140928-2
141058-1			

WIRE SIZE	CRIMP HEIGHT mm [INCH]	CRIMP HEIGHT REFERENCE SETTING (4)
18 AWG OR 0.75mm2	1.24+/-0.05 [.049+/-.002]	5.0
20 AWG OR 0.50mm2	1.09+/-0.05 [.043+/-.002]	6.6
22 AWG OR 0.35mm2	1.02+/-0.05 [.040+/-.002]	7.3

TERMINAL DATA: TE TERMINAL		TE CRIMP SPECIFICATION
TERMINAL NAME: FASTON .110 SERIES		
WIRE STRIP LENGTH 4.40-5.16 mm [.173-.203 IN]	INSULATION DIAMETER RANGE ∅1.20-1.90 mm [.047-.075 IN]	
TERMINAL APPLICATION SPECIFICATION	114-2036	- -
	-	- -

TERMINALS APPLIED

TE TERMINAL	TE TERMINAL	TE TERMINAL	TE TERMINAL
2238095-1			

WIRE SIZE	CRIMP HEIGHT mm [INCH]	CRIMP HEIGHT REFERENCE SETTING (4)
22 AWG	0.91+/-0.05 [.036+/-.002]	7.6

1. RECOMMENDED SPARE PARTS
2. REFER TO SUPPLIED INSTRUCTION SHEET FOR CLEANING, LUBRICATION AND STORAGE OF APPLICATOR.
3. APPLY PART NUMBER 1-23419-5 LOCTITE TO THREADS OF ITEMS 180. APPLY PART NUMBER 2-23419-6 LOCTITE TO THREADS OF ITEM 242.
4. CRIMP HEIGHT REFERENCE SETTING WAS THE SETTING USED WHEN THE APPLICATOR WAS QUALIFIED AT THE FACTORY. ADJUSTMENT MAY BE NECESSARY WHEN RUNNING APPLICATOR IN THE FIELD.
5. THE RECOMMENDED SET-UP FOR END FEED APPLICATORS IS POST-FEED WITH ITEM 2119653-2. THE APPLICATOR CAN BE CONFIGURED FOR PRE-FEED WITH ITEM 2119652-1 BUT MAY ENCOUNTER PROBLEMS WITH SOME APPLICATIONS. FEED ISSUES OR TERMINAL JAMMING MAY OCCUR IN THE PRE-FEED CONFIGURATION.
6. TERMINAL LUBRICANT IS RECOMMENDED.
7. THIS APPLICATOR HAS BEEN DESIGNED TO APPLY WIRES WITH THIN-WALL (FRL) INSULATION. THE INSULATION CRIMP AND APPLICABLE INSULATION RANGE MAY NOT CONFORM TO THE PARAMETER LISTED IN THE APPLICATION SPEC.
8. UNLESS SPECIFIED OTHERWISE TORQUE VALUES SHALL BE USED PER DOCUMENT, 101-35000.

*WARNING
ON INSTALLATION, SET WIRE DISC TO CRIMP HEIGHT REFERENCE SETTING FOR LARGEST WIRE SIZE. CRIMP HEIGHT REFERENCE SETTINGS GREATER THAN THE VALUE SHOWN MAY CAUSE DAMAGE TO THE CRIMP TOOLING, REFER TO THE INSTRUCTION SHEET FOR PROPER SETUP AND ADJUSTMENTS.

	-77	-2	-1	PART NO	DESCRIPTION	ITEM NO
	-	1	-	2119641-1	FEED CAM, AIR FEED	248
	-	1	1	2119082-4	CAM, SNAIL, INSULATION ADJUSTMENT	244
	-	1	1	2079764-1	WASHER, WAVE SPRING, CREST-TO-CREST	243
(3)	-	1	1	2119083-1	RETAINER, INSULATION DIAL	242
	-	-	1	2119580-1	MECHANICAL FEED ASSEMBLY	239
	-	1	-	2844940-3	AIR FEED MODULE	238
	-	1	1	1-18028-0	WASHER, FLAT, REG M8	192
(3)	-	1	1	1752354-9	STANDOFF,HOLD-DOWN	180
	-	1	1	6-993111-6	PIN, SLOTTED SPRING 3.0 X 14.0	177
	-	1	1	8-22280-7	SPRING, COMPRESSION	176
	-	1	1	1752353-2	GUIDE PIN,HOLDDOWN	175
	-	1	1	1901680-2	GUIDE PIN,HOLDDOWN	174
	-	REF	REF	994970-2	COUNTER, MAGNETIC	164
(6)	-	1	1	2119955-2	ASSY, LUBRICATOR, END FEED	84
	-	1	1	455888-5	SPACER, CRIMPER -	82
	-	1	1	1803607-4	DOCUMENTATION PACKAGE	71
	-	2	2	2-18032-2	SCR, SET, FLT PNT, M3 X 10.0	70
	-	1	1	2119740-1	TAG,IDENTIFICATION	67
	-	2	2	2168078-1	SCREW, DRIVE, RH, RoHS, 2 x .188	66
	-	1	1	1-1901681-3	HOLDDOWN, TERMINAL	65
	-	1	1	2168083-2	SCR, SKT HD CAP, RoHS, M4 X 8.0	60
	-	1	1	5-18022-5	SCR, HEX HD CAP, M4 X 6.0	59
	-	-	1	2063961-1	FEED FINGER	58
	-	4	4	2168400-4	SHCS, LOW HEAD, RoHS, M4 X 8	57
	-	2	2	2168083-2	SCR, SKT HD CAP, RoHS, M4 X 8.0	56
	-	2	2	5018030-1	NUT, HEX, REG, RoHS, M3	54
	-	2	2	986965-8	NUT, LOCK, HEX, TORQUE (M4)	53
	-	1	1	1-5018030-0	NUT, HEX, REG, RoHS, M3.5	52
	-	1	-	2063961-9	FEED FINGER	51
	-	1	2	18023-9	SCR, SKT HD CAP M4 X 6.0	49
(5)	-	-	1	2119652-1	FEED CAM, PRE FEED	48
(5)	-	-	1	2119653-1	FEED CAM, POST FEED	47
	-	1	1	2119655-5	APPLICATOR BASIC ASSEMBLY, EF	46
	-	1	1	1803517-1	RAM ASSEMBLY, EF ATLANTIC	44
	-	1	1	1803602-1	SCR, BHSC, RoHS (M8 X 25)	41
	-	8	8	1-18028-2	WASHER, FLAT, REG M4	33
	-	2	2	2168083-9	SCR, SKT HD CAP, RoHS, M4 X 20	31
	-	2	2	2168083-2	SCR, SKT HD CAP, RoHS, M4 X 8.0	29
	-	1	1	240639-4	STRIPPER (MACHINING)	27
	-	2	2	1-2168083-5	SCR, SKT HD CAP, RoHS, M4 X 30	25
	-	1	1	1752371-5	PLATE, STRIP GUIDE	24
	-	2	2	2-22281-3	SPRING, COMPRESSION	22
	-	1	1	1803292-4	DRAG	20
	-	2	2	1901259-3	GUIDE, LOWER STRIP	18
	-	4	4	1-2079383-1	SCR, BHSC, RoHS (M6 X 12)	17
	-	1	1	1752360-1	SPACER,HOLD-DOWN	13
(1)	-	1	1	240644-1	PLATE, REAR SHEAR	11
	-	-	-	-	-	10
(1)	-	1	1	690482-5	PLATE, FRONT SHEAR	9
(1)	1	1	1	9-1803001-8	ANVIL, COMBINATION, END FEED	8
(1)	-	1	1	2217206-7	BLADE, SLUG	7
	-	-	-	-	-	6
	-	1	1	240641-5	SPACER	5
	-	1	1	2-238011-6	BLOCK, CRIMPER SPACER	4
(1)	1	1	1	8-2119785-6	CRIMPER, INSULATION OVERLAP PREMIUM	3
	-	1	1	455888-6	SPACER, CRIMPER -	2
(1)	1	1	1	1-456403-9	CRIMPER, WIRE PREMIUM	1

THIS DRAWING IS A CONTROLLED DOCUMENT FOR TYCO ELECTRONICS CORPORATION. IT IS SUBJECT TO CHANGE AND THE CONTROLLING ENGINEERING ORGANIZATION SHOULD BE CONTACTED FOR THE LATEST REVISION.

DWN	J.HOU	28DEC2015
CHK	L.ZHANG	28DEC2015
APVD	U.GUO	28DEC2015

TE Connectivity
Harrisburg, PA 17105-3608

DIMENSIONS: mm

TOLERANCES UNLESS OTHERWISE SPECIFIED:
0 PLC ±-
1 PLC ±-
2 PLC ±-
3 PLC ±-
4 PLC ±-
ANGLES ±-

MATERIAL - -
FINISH - -

PRODUCT SPEC -
APPLICATION SPEC -
WEIGHT -

NAME: Ocean End Feed Applicator -

SIZE	CAGE CODE	DRAWING NO	RESTRICTED TO
A1	00779	C-2150636	-

Customer Accessible Production Drawing | SCALE 1:1 | SHEET 1 OF 4 | REV C

THIS DRAWING IS UNPUBLISHED. RELEASED FOR PUBLICATION 20
© COPYRIGHT 20 BY TYCO ELECTRONICS CORPORATION. ALL RIGHTS RESERVED.

LOC	DIST
A	66

REVISIONS

P	LTR	DESCRIPTION	DATE	DWN	APVD
	-	SEE SHEET 1	-	-	-

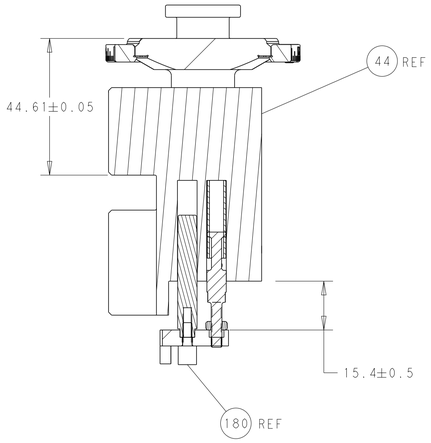

RAM AND HOLDDOWN SET-UP

FEED TYPE MECHANICAL

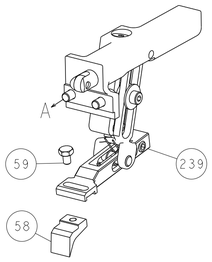

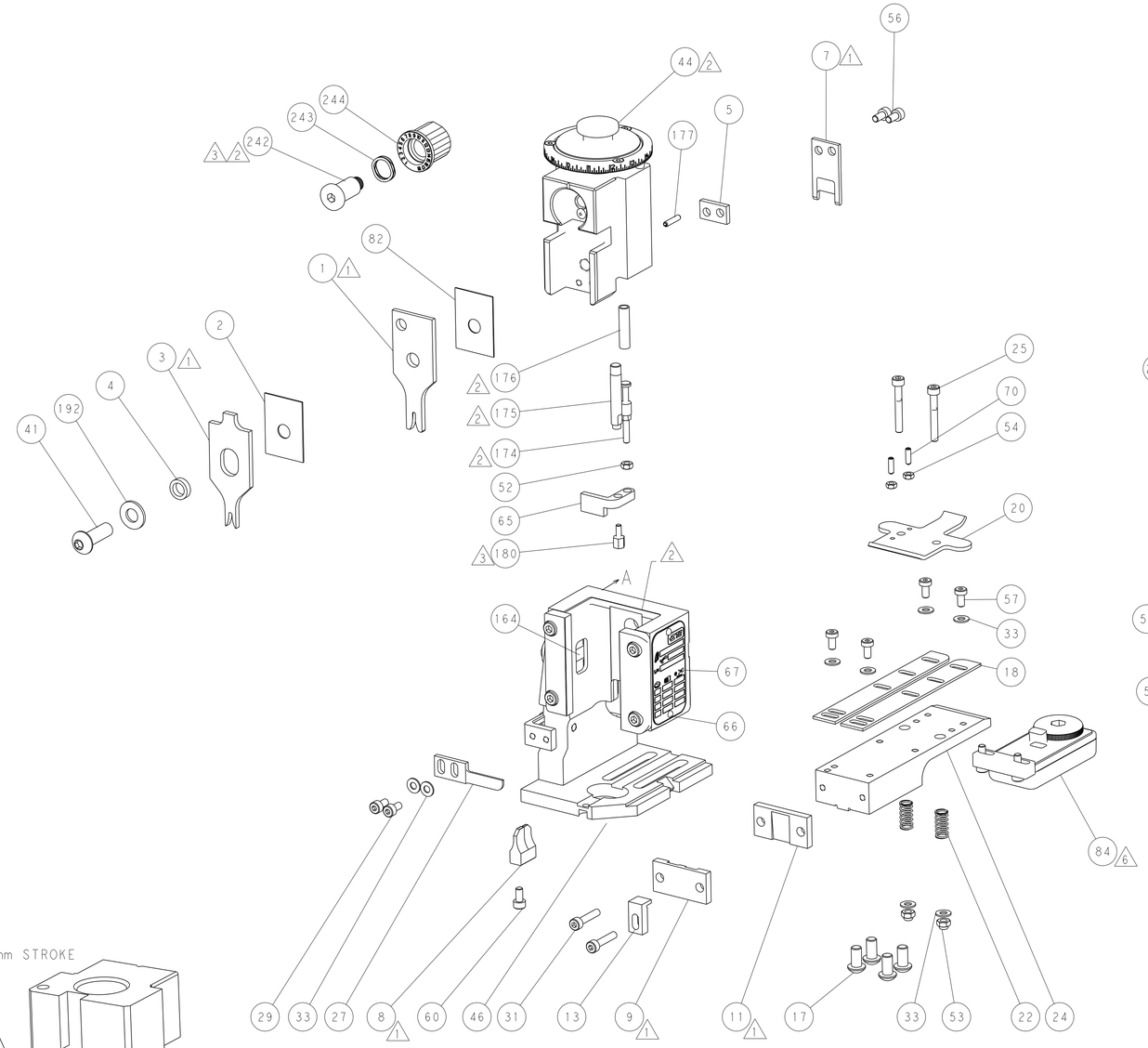

PNEUMATIC

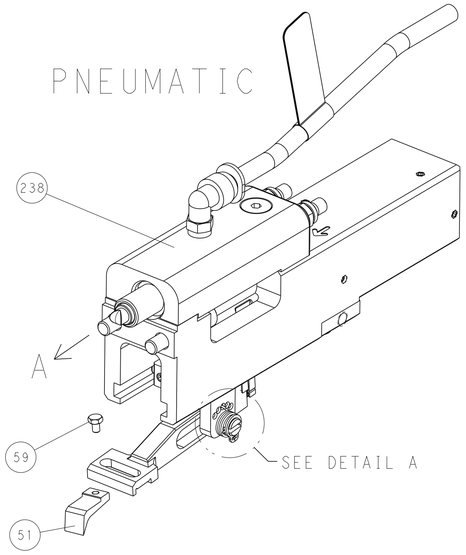

FEED SPRING SETTING POSITION

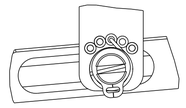

DETAIL A

CAM POSITIONS

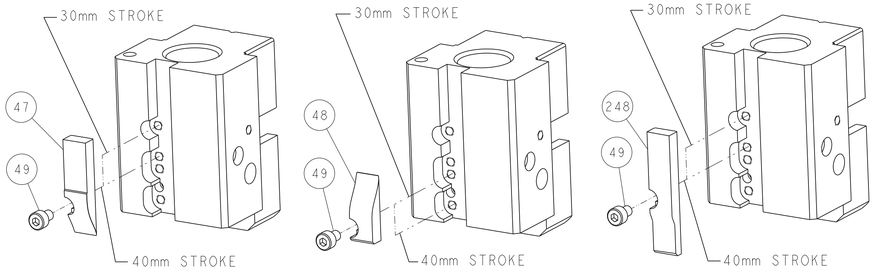

MECHANICAL POST FEED

MECHANICAL PRE FEED

AIR FEED

THIS DRAWING IS A CONTROLLED DOCUMENT FOR TYCO ELECTRONICS CORPORATION. IT IS SUBJECT TO CHANGE AND THE CONTROLLING ENGINEERING ORGANIZATION SHOULD BE CONTACTED FOR THE LATEST REVISION.

DIMENSIONS: mm

TOLERANCES UNLESS OTHERWISE SPECIFIED:
0 PLC ±-
1 PLC ±-
2 PLC ±-
3 PLC ±-
4 PLC ±-
ANGLES ±-

MATERIAL - -
FINISH - -

DWN	J.HOU	28DEC2015
CHK	L.ZHANG	28DEC2015
APVD	U.GUO	28DEC2015
PRODUCT SPEC	-	
APPLICATION SPEC	-	
WEIGHT	-	

TE Connectivity
Harrisburg, PA 17105-3608

NAME: Ocean End Feed Applicator -

SIZE	CAGE CODE	DRAWING NO	RESTRICTED TO
A1	00779	C-2150636	-

Customer Accessible Production Drawing

SCALE	SHEET	OF	REV
1:1	2	4	C