THIS DRAWING IS UNPUBLISHED. RELEASED FOR PUBLICATION 20
© COPYRIGHT 20 BY TYCO ELECTRONICS CORPORATION. ALL RIGHTS RESERVED.

PART NUMBER	REV	FIRST USED	POWER UNIT	FEED TYPE	DESCRIPTION
1855673-1	B	122500-1	LEADMAKER	AIR FEED	CUTS CARRIER
1855673-2	B	565435-5	BENCH MODEL K	AIR FEED	CUTS CARRIER
1855673-3	B	354500-1	BENCH MODEL G	AIR FEED	CUTS CARRIER
1855673-6	B	122500-1	LEADMAKER	AIR FEED	CONTINUOUS CARRIER
~~7 1855673-7~~	~~A~~	~~-~~	~~-~~	~~-~~	~~SPARE PARTS~~ OBS

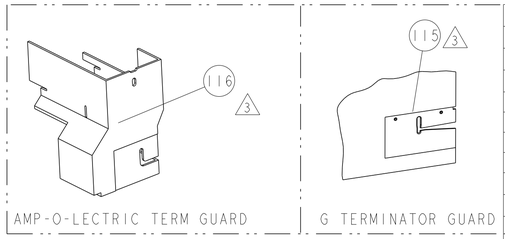

TERMINAL NAME: TAB 9.5X1.2mm SINGLE WIRE SEALING					
TE PN	-	TE TERMINAL - TE CRIMP SPECS			
963774	-				
-	-	CRIMP HEIGHT		WIRE SIZE	REF SETTING
-	-	3.60mm+.05/-.05[.142+.002/-.002]		10mm2 (6)	A0
-	-	3.29mm+.05/-.05[.130+.002/-.002]		8mm2 (6)	C4
-	-	2.98mm+.05/-.05[.117+.002/-.002]		6mm2 (6)	E5
-	-			-	-
-	-	CRIMP	SIZE	TYPE	RANGE
SEAL PN	-				
1355437-1	-	WIRE	5.08mm [.200]	F	6-10mm2
1355437-2	-	INSUL	10.95mm [.430]	O	Ø10.000 MAX (5)
WIRE STRIP LENGTH 9.70-10.30	TERM APPL SPEC 114-18076	FEED 32.50	APPLICATOR INSTRUCTIONS 408-8040		SET UP GAGE 458637-1

(1) RECOMMENDED SPARE PARTS

(2) GREASE LIGHTLY

(3) GUARD MUST BE IN PLACE WHEN OPERATING APPLICATOR IN A BENCH MACHINE

(4) APPLY TORQ-SEAL IN ALLEN SOCKET TO FILL HOLE AFTER FLAT HD HAS BEEN ADJUSTED TO CORRECT HEIGHT AT QUALIFICATION. APPLY PN 1-23419-5 LOC-TITE TO THREADS.

(5) THE INSULATION RANGE LISTED IS FOR THE TERMINAL. THE INSULATION RANGE FOR THE SEALS ARE LISTED BELOW.

SEAL PN	INSULATION RANGE
1355437-1	Ø4.6-5.2mm
1355437-2	Ø5.8-6.6mm

(6) USE SHEAR DEPRESSOR TO DEPRESSOR SCREW SETTING ACCORDING TO WIRE SIZE AS LISTED BELOW:

WIRE SIZE	SHEAR DEPRESSOR	DEPRESSOR SCREW SETTING [ITEM 57]
10mm2	ITEM 5 [122399-2]	7.06mm [.278]
6 OR 8mm2	ITEM 6 [122399-6]	6.25mm [.246]

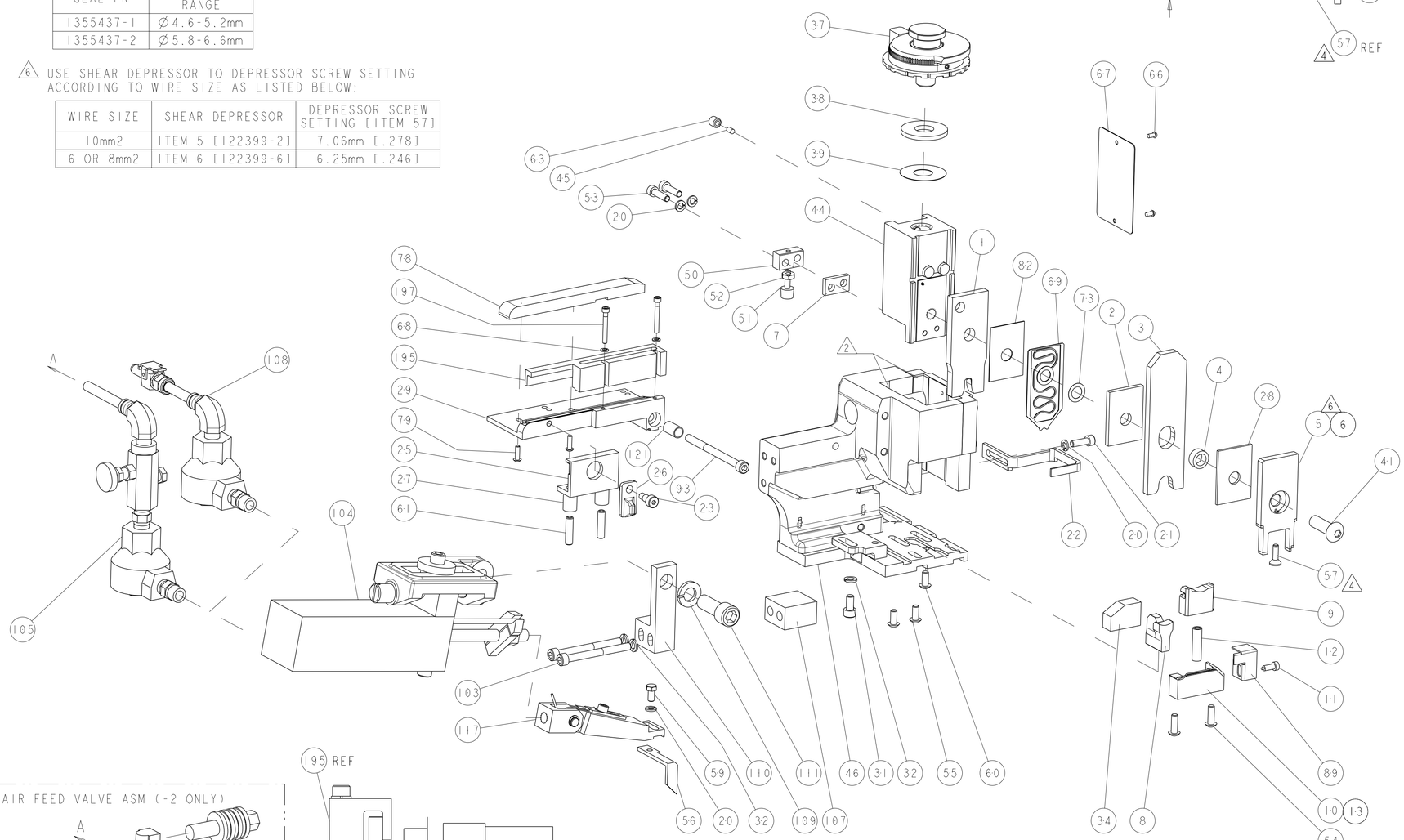

OBSOLETE

LOC	DIST
A	66

REVISIONS

P	LTR	DESCRIPTION	DATE	DWN	APVD
	A	RELEASED	21DEC2012	RK	GB
	B	ECR-21-002669	02MAR2021	JAH	GB
	B1	ECR-21-006230	14JUN2021	JWC	TE

							PART NO	DESCRIPTION	ITEM NO
	2	2	2	2	-		6-21000-8	SCR, SKT HD CAP 4-40 X .875	197
	1	1	1	1	-		3-679651-5	FRONT STRIP GUIDE	195
	1	1	1	1	-		1-22281-8	SPRING, COMPRESSION	121
	-	-	REF	-	-		692655-6	AIR FEED VALVE ASSEMBLY	118
	1	1	1	1	-		461062-1	FEED FINGER ASSEMBLY	117
(3)	-	-	REF	-	..		455749-1	GUARD WINDOW	116
(3)	-	REF	-	-	..		679532-1	INSERT, GUARD	115
	1	1	1	1	-		3-21001-5	SCR, SKT HD CAP 3/8-16 X 1.000	111
	1	1	1	1	-		459610-3	MOUNT, FEED BRACKET	110
	1	1	1	1	-		21024-8	WASHER, SPRG LOCK, REG 3/8	109
	1	1	-	1	-		692655-7	AIR FEED VALVE ASSEMBLY	108
	1	1	1	1	-		461690-1	SPACER, AIR FEED	107
	-	-	REF	-	-		24024-2	VALVE, SHUT OFF	106
	-	-	1	-	-		692655-5	AIR FEED VALVE ASSEMBLY	105
	1	1	1	1	-		461065-2	ASSEMBLY, AIR FEED	104
	2	2	2	2	-		4-21000-3	SCR, SKT HD CAP 10-32 X 2.000	103
	1	1	1	1	-		8-21000-7	SCR, SKT HD CAP 10-32 X 2.500	93
	1	1	1	1	-		318563-1	GUARD, FRONT CHIP	89
	1	1	1	1	-		455888-5	SPACER, CRIMPER	82
	2	2	2	2	-		1-21002-4	SCR, BTN SKT HD CAP 4-40 X .375	79
	1	1	1	1	-		1633580-4	FENCE	78
	1	1	1	1	-		2119943-1	WASHER, SPACER	73
	1	1	1	1	-		4088040	SF APPL INST 408-8040	72
	1	1	1	1	-		217238-1	GENERAL INSTRUCTION PKG	71
	1	1	1	1	-		2119791-9	DEPRESSOR, WIRE	69
	2	2	2	2	-		21024-2	WASHER, SPRG LOCK, REG NO 4	68
	1	1	1	1	-		461264-5	PLATE, IDENTIFICATION	67
	2	2	2	2	-		21017-2	SCREW, DRIVE	66
	1	1	1	1	-		21009-2	SCR, SET, SELF LOCKING 1/4-20 X .250	63
	2	2	2	2	-		5-21006-6	SCR, SET, CUP POINT 10-32 X .750	61
	1	1	1	1	-		22733-8	SCR, BHSC, SELF-LOCKING, 8-32 X .375	60
	1	1	1	1	-		2-22603-0	SCREW, MACH, HEX HD, 8-32 x .312	59
(6)	2	2	2	2	-		2-21003-0	SCR, FLT SKT HD CAP 6-32 X .500	57
	1	1	1	1	-		5-694433-2	FEED PAWL	56
	2	2	2	2	-		2-21002-1	SCR, BTN SKT HD CAP 8-32 X .375	55
	2	2	2	2	-		2-21002-2	SCR, BTN SKT HD CAP 8-32 X .500	54
	2	2	2	2	-		2-21000-8	SCR, SKT HD CAP 8-32 X .625	53
	1	1	1	1	-		21018-5	NUT, HEX, REG 6-32	52
	1	1	1	1	-		811242-8	BUMPER, HOLD DOWN	51
	1	1	1	1	-		690753-1	SPACER, TONKER	50
	1	1	1	1	-		1-1633399-6	APPL., BASIC AIR FEED SUB ASSY	46
	1	1	1	1	-		690191-1	PLUG,NYLON	45
	1	1	1	1	-		2-819307-3	RAM, SIDE FEED	44
	1	1	1	1	-		7-21002-9	SCR, BTN SKT HD CAP 5/16-24 X 1.00	41
	1	1	1	1	-		690125-1	SHIM SUB-ASSY	39
	1	1	1	1	-		690124-3	WASHER, RAM (.110)	38
	1	1	1	1	-		879103-2	FINE ADJUST HEAD ASSEMBLY	37
	1	1	1	1	-		690786-7	TERMINAL SUPPORT	34
	3	3	3	3	-		21024-5	WASHER, SPRG LOCK, REG NO 10	32
	1	1	1	1	-		3-21000-4	SCR, SKT HD CAP 10-32 X .375	31
	1	1	1	1	-		2-1633087-2	PLATE, STRIP GUIDE	29
	1	1	1	1	-		1-455888-5	SPACER, CRIMPER	28
	2	2	2	2	-		1-22282-1	SPRING, COMPRESSION	27
	1	1	1	1	-		356835-1	LEVER, DRAG RELEASE	26
	1	1	1	1	-		240792-1	DRAG, TERMINAL	25
	1	1	1	1	-		21989-8	SCR, SKT HD SHLDR 3/16 DIA X .250	23
	1	1	1	1	-		1-456468-3	STRIPPER, SPECIAL	22
	1	1	1	1	-		2-21000-7	SCR, SKT HD CAP 8-32 X .500	21
	4	4	4	4	-		21024-4	WASHER, SPRG LOCK, REG NO 8	20
(1)	1	-	-	-	-		1-679625-8	SHEAR HOLDER, FRONT (NO CUT)	13
	1	1	1	1	-		4-22280-8	SPRING, COMPRESSION	12
	1	1	1	1	-		1-690461-7	STOP, SHEAR	11
(1)	-	1	1	1	-		1-690459-7	SHEAR HOLDER, FRONT	10
(1)	1	1	1	1	-		318059-1	FLOATING SHEAR, FRONT	9
(1)	1	1	1	1	-		3-1633332-3	ANVIL, COMBINATION	8
	1	1	1	1	-		240641-5	SPACER	7
(6)	1	1	1	1	-		122399-6	DEPRESSOR, SHEAR	6
(6)	1	1	1	1	-		122399-2	DEPRESSOR, SHEAR	5
	1	1	1	1	-		1-238011-4	BLOCK, CRIMPER SPACER	4
(1)	1	1	1	1	-		1-655830-8	CRIMPER, INSUL O	3
	1	1	1	1	-		3-455888-7	SPACER, CRIMPER	2
(1)	1	1	1	1	-		5-1633305-3	CRIMPER, WIRE PREMIUM	1
	-77	-6	-3	-2	-1	U/M			

THIS DRAWING IS A CONTROLLED DOCUMENT FOR TYCO ELECTRONICS CORPORATION. IT IS SUBJECT TO CHANGE AND THE CONTROLLING ENGINEERING ORGANIZATION SHOULD BE CONTACTED FOR THE LATEST REVISION.

DWN X ZHAO	25OCT2012	TE Connectivity, Harrisburg, PA 17105-3608
CHK S XI	25OCT2012	
APVD S XI	25OCT2012	NAME: FINE ADJUST SIDE FEED HDM APPLICATOR
DIMENSIONS: INCHES	TOLERANCES UNLESS OTHERWISE SPECIFIED: 0 PLC ±- 1 PLC ±- 2 PLC ±- 3 PLC ±- 4 PLC ±- ANGLES ±-	PRODUCT SPEC -
		APPLICATION SPEC -
MATERIAL - -	FINISH - -	WEIGHT -
SIZE A1	CAGE CODE 00779	DRAWING NO C-1855673
RESTRICTED TO -		
Customer Accessible Production Drawing	SCALE 3:5	SHEET 1 OF 1
REV B1		