MS52XX SMD Presssure Sensor

- **1, and 12 bar absolute pressure range**
- **Uncompensated**
- **Piezoresistive silicon micromachined sensor**
- **Surface mount 7.6 x 7.6 mm**
- **Low-noise, high-sensitivity, high-linearity**

DESCRIPTION

The MS52XX SMD pressure sensor series is designed for pressure systems with the highest demands on resolution and accuracy. The device consists of a silicon micromachined pressure sensor die mounted on a 7.6 x 7.6 mm ceramic carrier protected by a metal cap. The MS52XX can be delivered in a highly-sensitive version giving a maximal output voltage or in a highly-linear version giving a linear output voltage directly proportional to the applied pressure.

Full scale pressure	High Sensitivity Version			High Linearity Versions		
	Product code	Full scale span	Linearity	Product code	Full scale span	Linearity
1 bar	MS5201-AN	240 mV	±0.20 % FS	MS5201-BN	150 mV	±0.05 % FS
12 bar				MS5212-BM	150 mV	±0.05 % FS

FEATURES

- Low-cost SMD ceramic package
- High-reliability, low-drift
- -40 °C to +125 °C operation range
- Optional: Gel protection against humidity and water

APPLICATIONS

- Absolute pressure sensor systems
- High resolution altimeters, variometers
- Barometers
- Engine controls
- Tire pressure

PIN CONFIGURATION

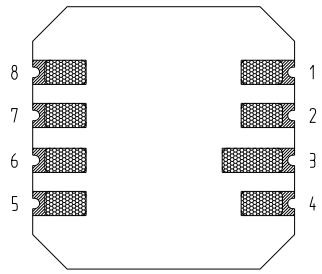

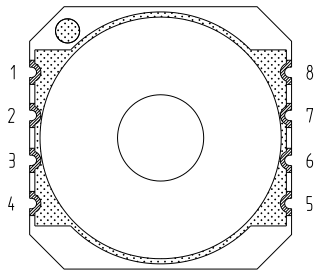

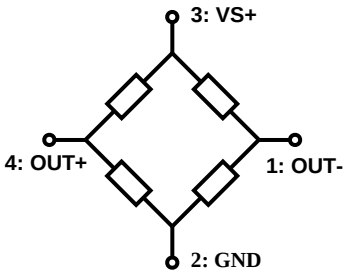

PIN DESCRIPTION

Pin Name	Pin No	Function
OUT-	1	Negative output voltage of Wheatstone bridge
GND	2	Ground
VS+	3	Supply voltage of Wheatstone bridge
OUT+	4	Positive output voltage of Wheatstone bridge

ABSOLUTE MAXIMUM RATINGS

Parameter	Symbol	Conditions	Min	Max	Unit
Supply voltage	VS+	Ta = 25 °C	-	20	V
Storage temperature	T_S		-40	+125	°C
Overpressure MS5201-AN MS5201-BN MS5212-BM	P	Ta = 25 °C	- - -	5 10 30	bar

ELECTRICAL CHARACTERISTICS

HIGH SENSITIVITY VERSION

(Vs+ = 5 V; Ta = 25 °C)

	Parameter	Min	Typ	Max	Unit	Notes
MS5201-AN	Operating pressure range	0	-	1	bar	
	Full-scale span (FS)	190	240	290	mV	
	Sensitivity	190	240	290	mV/bar	
	Linearity	-	±0.15	±0.4	% FS	1, 6
	Operating temperature range	-40	-	125	°C	
	Zero pressure offset	-40	0	40	mV	
	Pressure hysteresis	-	-	±0.20	% FS	2, 6
	Temperature hysteresis	-	0.3	0.8	% FS	3, 6
	Repeatability	-	-	±0.20	% FS	4, 6
	Bridge resistance	3.0	3.4	3.8	kΩ	
	Temperature coefficient of resistance	+2'400	2'900	+3'300	ppm/°C	5, 6
	Temperature coefficient of span	-1'500	-1'900	-2'300	ppm/°C	5, 6
	Temperature coefficient of offset	-80	-	+80	µV/°C	5, 6

NOTES

1) Deviation at one half full-scale pressure from the least squares best line fit over pressure range.
2) Maximum difference of output voltage after 1 pressure cycle at any pressure within the operating pressure range.
3) Maximum difference in offset after one thermal cycle from -40°C to +125°C.
4) Same as 2) after 10 pressure cycles.
5) Slope of the end-point straight line from 25°C to 60°C.
6) Not 100% tested.

ELECTRICAL CHARACTERISTICS (CONT.)

HIGH LINEARITY VERSIONS

(Vs+ = 5 V; Ta = 25 °C)

	Parameter	Min	Typ	Max	Unit	Notes
MS5201-BN	Operating pressure range	0	-	1	bar	
	Full-scale span (FS)	120	150	180	mV	
	Sensitivity	120	150	180	mV/bar	
	Linearity	-	±0.05	±0.20	% FS	1, 6
MS5212-BM	Operating pressure range	0	-	12	bar	
	Full-scale span (FS)	120	150	180	mV	
	Sensitivity	10	12.5	15	mV/bar	
	Linearity		±0.15	±0.20	% FS	1, 6
All Ranges	Operating temperature range	-40	-	125	°C	
	Zero pressure offset	-40	0	40	mV	
	Pressure hysteresis	-	-	±0.20	% FS	2, 6
	Temperature hysteresis	-	0.3	0.8	% FS	3, 6
	Repeatability	-	-	±0.20	% FS	4, 6, 7
	Bridge resistance	3.0	3.4	3.8	kΩ	
	Temperature coefficient of resistance	+2'400	2'900	+3'300	ppm/°C	5, 6
	Temperature coefficient of span	-1'500	-1'900	-2'300	ppm/°C	5, 6
	Temperature coefficient of offset	-80	-	+80	µV/°C	5, 6

NOTES

1) Deviation at one half full-scale pressure from the least squares best line fit over pressure range.
2) Maximum difference of output voltage after 1 pressure cycle at any pressure within the operating pressure range.
3) Maximum difference in offset after one thermal cycle from -40°C to +125°C.
4) Same as 2) after 10 pressure cycles.
5) Slope of the end-point straight line from 25°C to 60°C.
6) Not 100% tested.
7) MS5212-BM: Max. 0.3% FS.

APPLICATION INFORMATION

GENERAL

The MS52XX is a miniaturized absolute pressure sensor series that has been designed for surface mounting applications. Its main advantages are the high reliability of the semiconductor sensor and a design which makes it suitable for applications requiring small-scale and cost-efficient solutions.

The sensor element of the MS52XX consists of a micromachined silicone membrane with borosilicate glass wafer-bonded under vacuum to the back-side for reference pressure. Implanted resistors make use of the piezo-resistive effect to sense pressure applied to the membrane. The sensor is mounted in a special process allowing best-offset stability making the part suitable for direct PCB assembly.

Typical applications for this miniaturized pressure sensor MS52XX are altitude measurements and the measurement of atmospheric reference pressure in medical and industrial equipment as well as in automotive and industrial applications, consumer electronics and pneumatics.

Full Scale Pressure	High Sensitivity Version (MS5201-AN)	High Linearity Versions (MS5201-BN and MS5212-BM)
1 bar	Variometer, altimeter, barometer	High end altimeter, medical instrumentation
12 bar		Pneumatic brake

LIGHT SENSITIVITY

The MS52XX is sensitive to sunlight, especially to infrared light sources. This is due to the strong photo effect of silicon. As the effect is reversible there will be no damage, but the user has to take care that in the final product the sensor must not be exposed to direct light during operation. This can be achieved for instance by placing mechanical shielding with holes in such way that light cannot go trough.

CONNECTION TO PCB

The package outline of the module allows the use of a flexible PCB to connect it. This can be important for applications in watches and other special devices, and will also reduce mechanical stress on the device.
For applications subjected to mechanical shock, it is recommended to enhance the mechanical reliability of the solder junctions by covering the rim or the corners of MS52XX ceramic substrate with glue or Globtop-like material.

SOLDERING

Please refer to the application note AN808 for all soldering issues.

CLEANING

The MS52XX has been manufactured under cleanroom conditions. Each device has been inspected for the homogeneity and the cleanness of the silicone gel. It is therefore recommended to assemble the sensor under class 10’000 or better conditions. Should this not be possible, it is recommended to protect the sensor opening during assembly from entering particles and dust. To avoid cleaning of the PCB, solder paste of type “no-clean” shall be used. **Cleaning may damage the sensor.**

PACKAGE OUTLINES

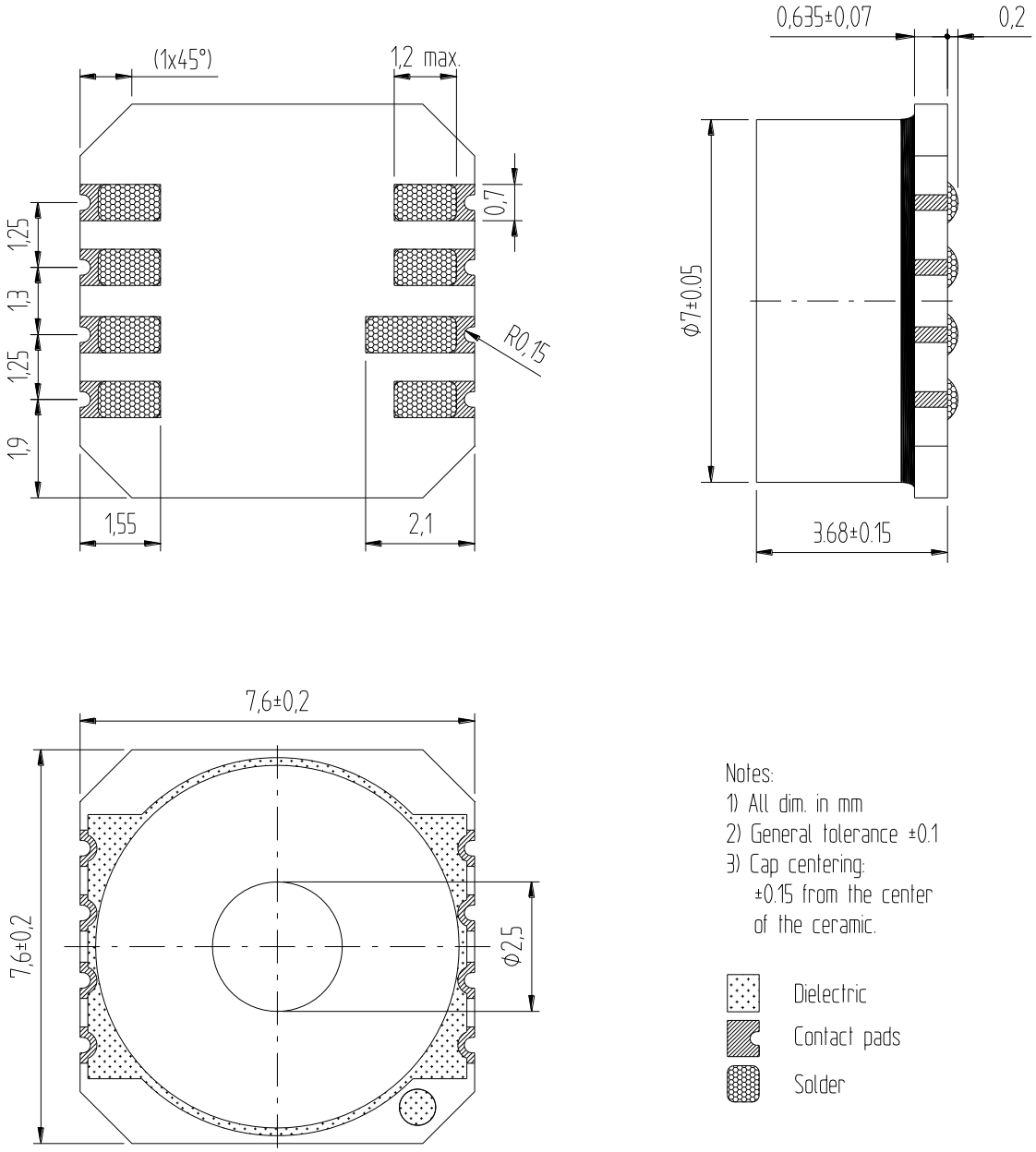

Device package outlines of **MS5201-AN** and **MS5201-BN**
(Metal cap with nickel finish, gel protection of bonding wires)

PACKAGE OUTLINES (CONT.)

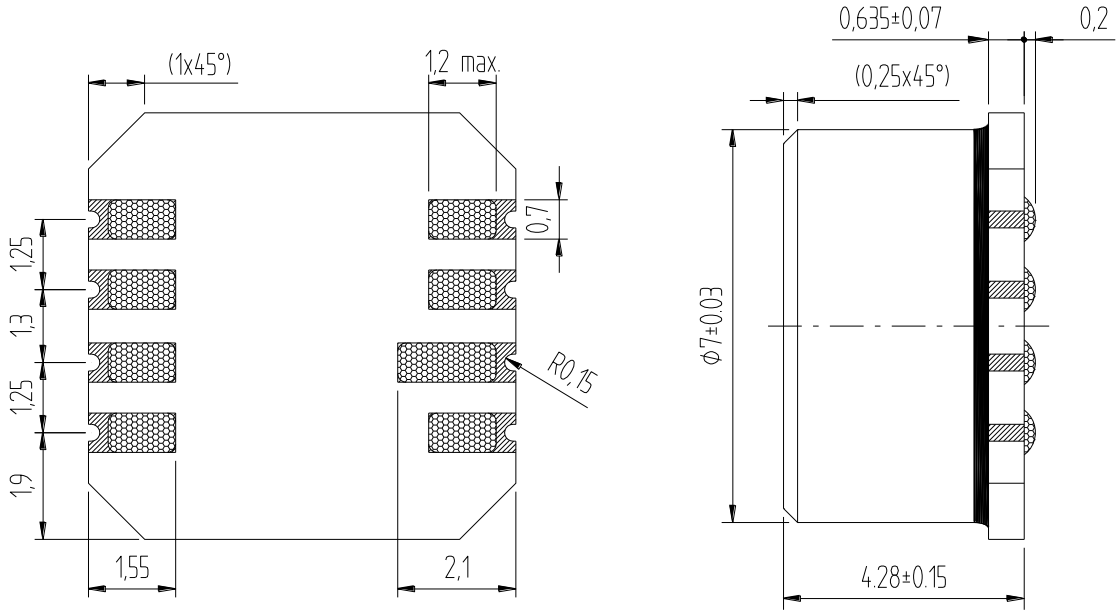

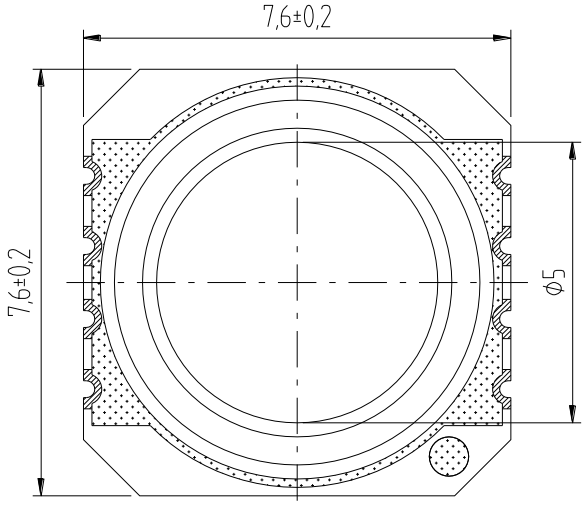

Notes:
1) All dim. in mm
2) General tolerance ±0.1
3) Cap centering:
±0.15 from the center
of the ceramic.

Dielectric
Contact pads
Solder

Device package outlines of **MS5212-BM** (Stainless steel cap, with or without gel protection of bonding wires)

RECOMMENDED PAD LAYOUT

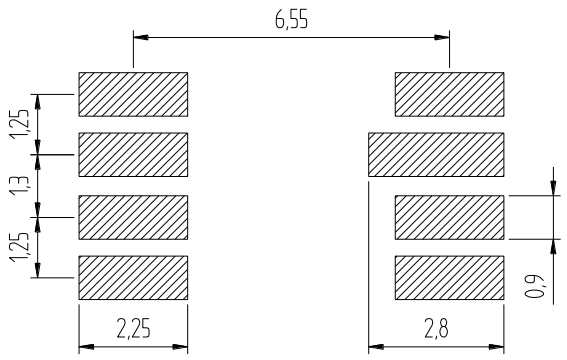

Recommended pad layout for soldering of the MS52XX on a printed circuit board

SHIPPING PACKAGE

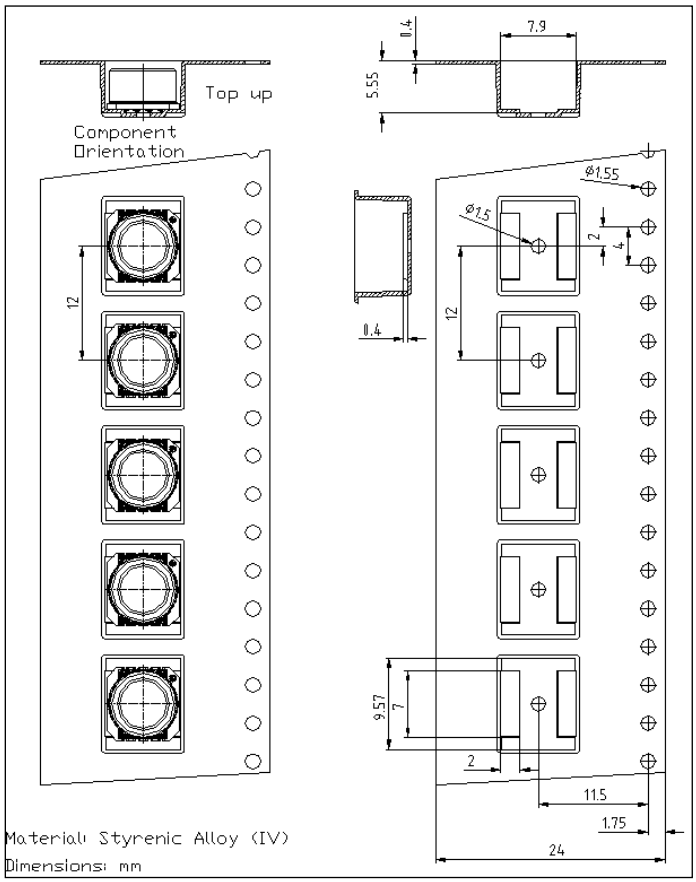

Tape and reel

SHIPPING PACKAGE (CONT.)

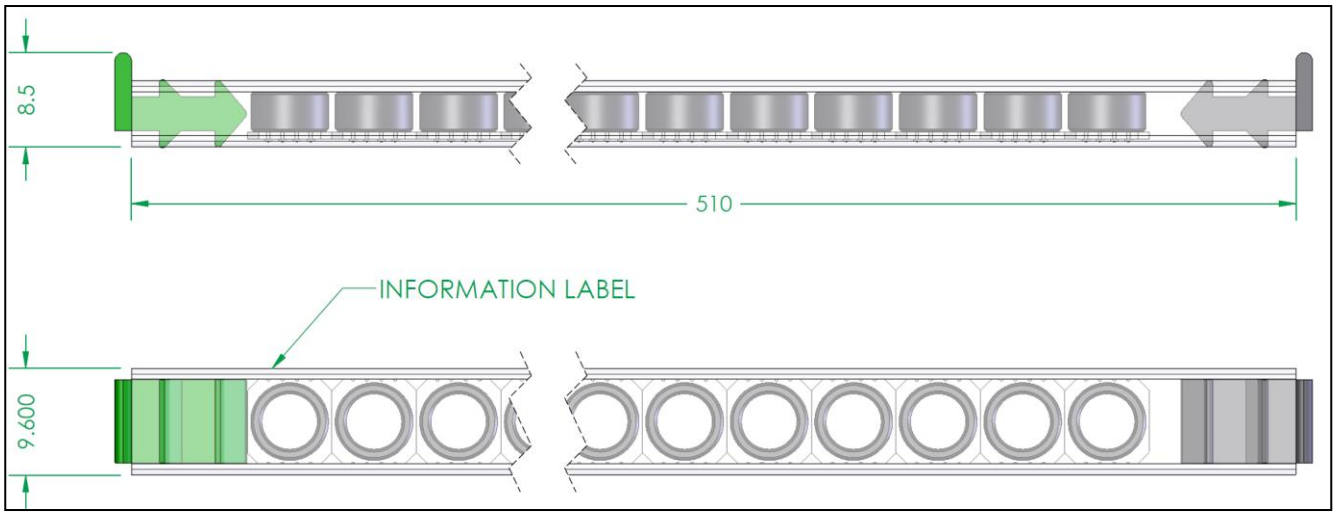

Tube

ORDERING INFORMATION

Product code	Product	Art. No	Package	Comments	Delivery Form
MS5201-AN	Pressure sensor 1 bar, High sensitivity	325201002-00	SMD hybrid with solder bumps, Metal cap with nickel finish, drop of gel on sensor, no gel protection of the bonding wires		Tube
MS5201-BN	Pressure sensor 1 bar, High linearity	325201000-00			Tube
MS5212-BM transparent gel	Pressure sensor 12 bar, High linearity	325212001-00	SMD hybrid with solder bumps, Stainless steel cap, Gel protection of sensor and bonding wires	Same sensor for both articles, only the gel protection changes	Tube
MS5212-BM white gel		325212002-00			Tube
MS5212-BM white gel		325212002-50			Tape and reel

FACTORY CONTACTS

EUROPE

MEAS Switzerland Sàrl
Ch. Chapons-des-Prés 11
CH-2022 Bevaix

Tel: +41 32 847 9550
Fax: + 41 32 847 9569
e-mail: sales.ch@meas-spec.com
Website: www.meas-spec.com

ASIA

Measurement Specialties (China), Ltd.
No. 26 Langshan Road
Shenzhen High-Tech Park (North)
Nanshan District, Shenzhen, 518057
China
Tel: +86 755 3330 5088
Fax: +86 755 3330 5099
e-mail: pfg.cs.asia@meas-spec.com
Website: www.meas-spec.com

NORTH AMERICA

Measurement Specialties
45738 Northport Loop West
Fremont, CA 94538

Tel: +1 800 767 1888
Fax: +1 510 498 1578
e-mail: pfg.cs.amer@meas-spec.com
Website: www.meas-spec.com

The information in this sheet has been carefully reviewed and is believed to be accurate; however, no responsibility is assumed for inaccuracies. Furthermore, this information does not convey to the purchaser of such devices any license under the patent rights to the manufacturer. Measurement Specialties, Inc. reserves the right to make changes without further notice to any product herein. Measurement Specialties, Inc. makes no warranty, representation or guarantee regarding the suitability of its product for any particular purpose, nor does Measurement Specialties, Inc. assume any liability arising out of the application or use of any product or circuit and specifically disclaims any and all liability, including without limitation consequential or incidental damages. Typical parameters can and do vary in different applications. All operating parameters must be validated for each customer application by customer's technical experts. Measurement Specialties, Inc. does not convey any license under its patent rights nor the rights of others.