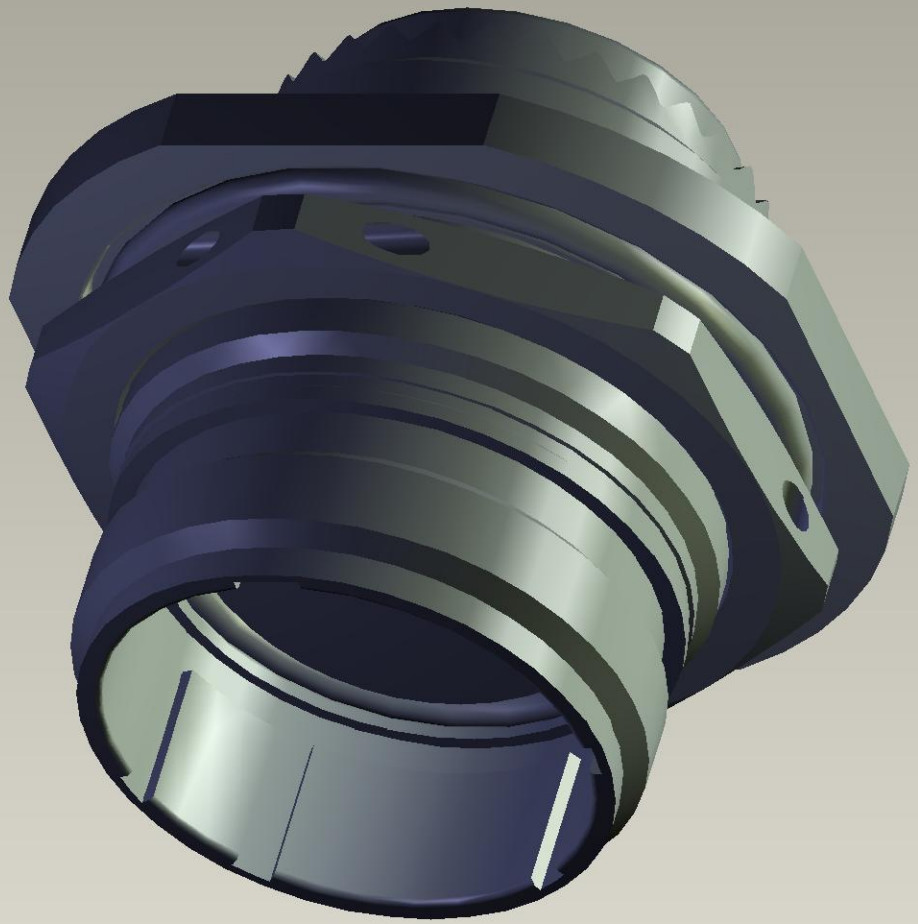

Instance:C-ZPF000000000039047