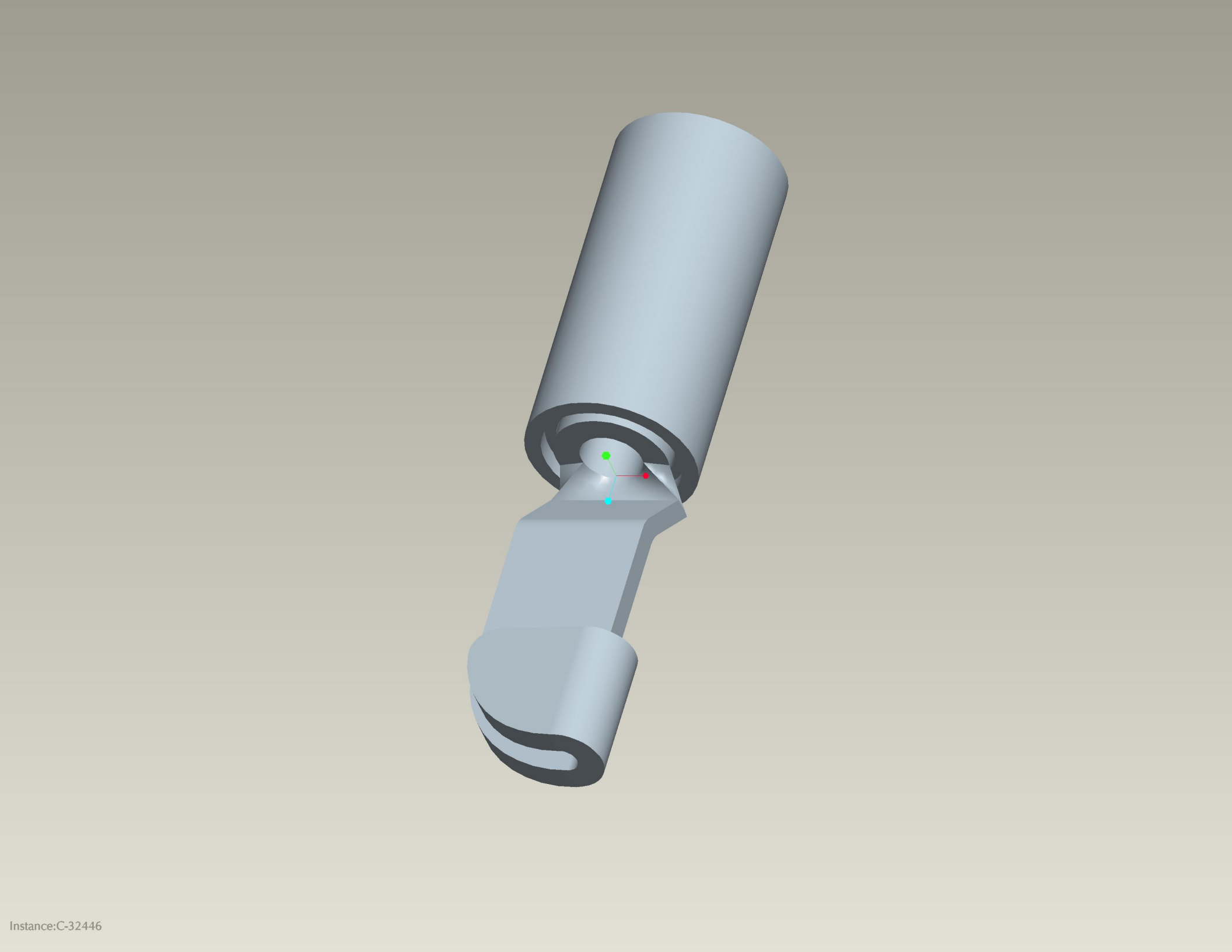
Instance:C-32446