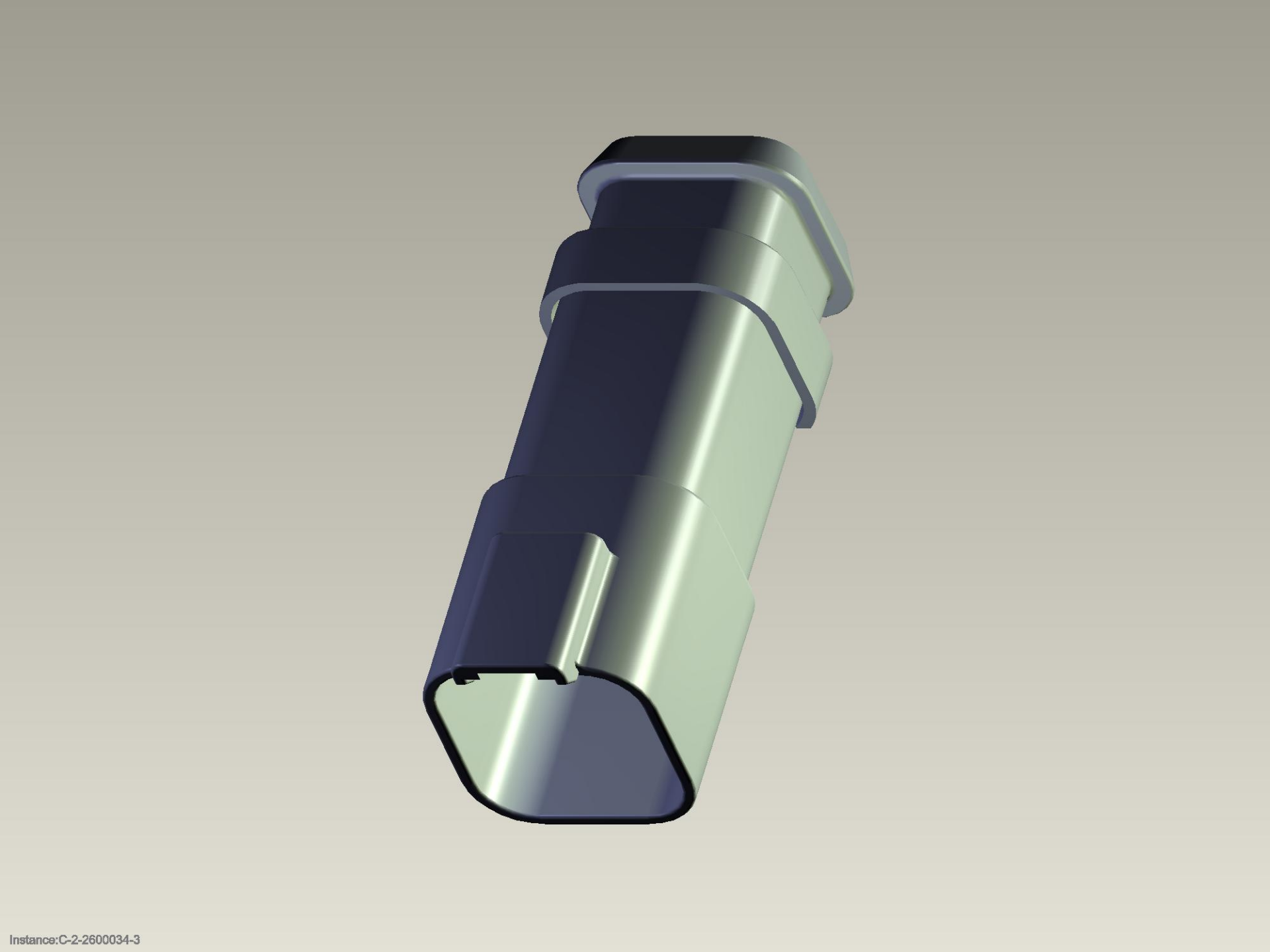

Instance:C-2-2600034-3