THIS DRAWING IS UNPUBLISHED. RELEASED FOR PUBLICATION 20
© COPYRIGHT 20 BY - ALL RIGHTS RESERVED.

REVISIONS

P	LTR	DESCRIPTION	DATE	DWN	APVD
	A	INITIAL RELEASE	20MAY2016	DL	CW

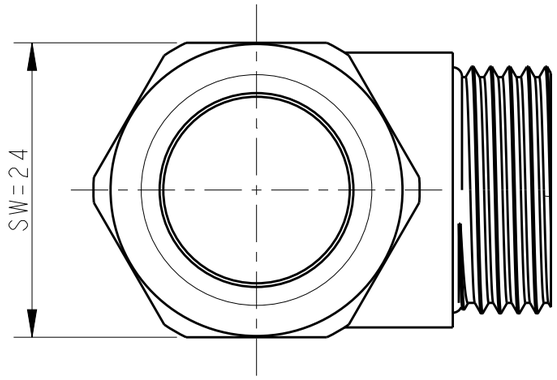

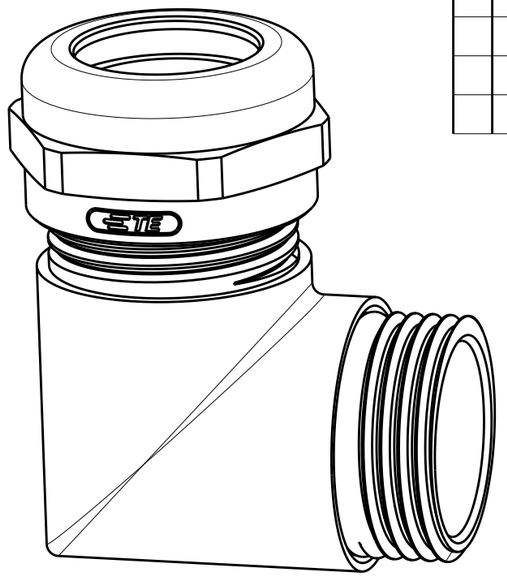

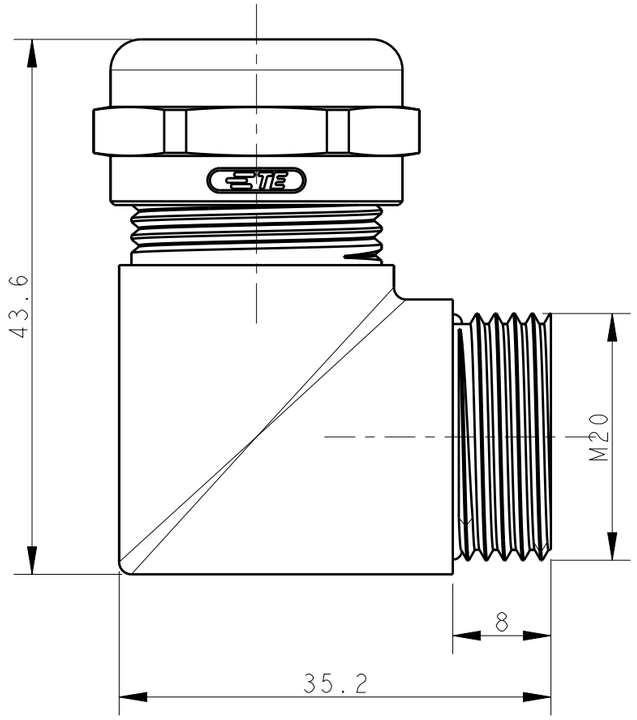

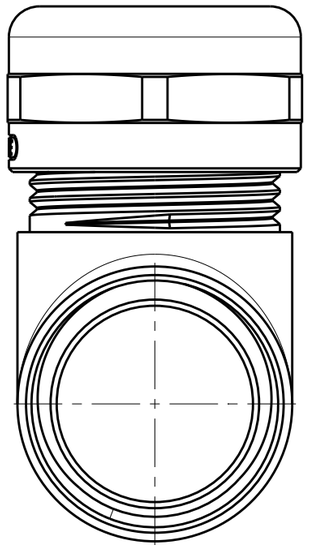

NOTES:
1. TECHNICAL CHARACTERISTICS:
   SHELL MATERIAL: BRASS WITH Ni PLATED
   PINCH RING MATERIAL: TPE
   SEAL MATERIAL: NBR
   PROTECTION DEGREE: IP68 (MATED)
   WIRE RANGE: Ø13.5~Ø15mm

注释：
1. 技术参数：
   主体材料： 铜镀镍
   夹紧件材料： TPE
   密封材料： NBR
   防护等级： IP68 （配合）
   夹线范围： Ø13.5~Ø15mm

PART NUMBER 料号	PART DESCRIPTION 描述	
T3265202011-000	STUD-20-M	ANGLED METAL CABLE GLAND, M20 金属直角变径接头M20

THIS DRAWING IS A CONTROLLED DOCUMENT.

DIMENSIONS: mm

TOLERANCES UNLESS OTHERWISE SPECIFIED:
0 PLC ±-
1 PLC ±-
2 PLC ±-
3 PLC ±-
4 PLC ±-
ANGLES ±-

MATERIAL - -
FINISH - -

DWN DAVID LI 20MAY2016
CHK CHRIS WANG 20MAY2016
APVD XIANG XU 20MAY2016
PRODUCT SPEC -
APPLICATION SPEC -
WEIGHT -
CUSTOMER DRAWING

TE Connectivity

NAME
ANGLED METAL CABLE GLAND
STUD-20-M

SIZE	CAGE CODE	DRAWING NO	RESTRICTED TO
A3	-	C-T3265202011000	-

SCALE 2:1 SHEET 1 OF 1 REV A

1470-19 (3/13)